SECURITY LOCK with PANIC EXIT DEVICE

INSTALLATION, USE AND MAINTENANCE INSTRUCTIONS

GOOUT

EN 179

EN 1125

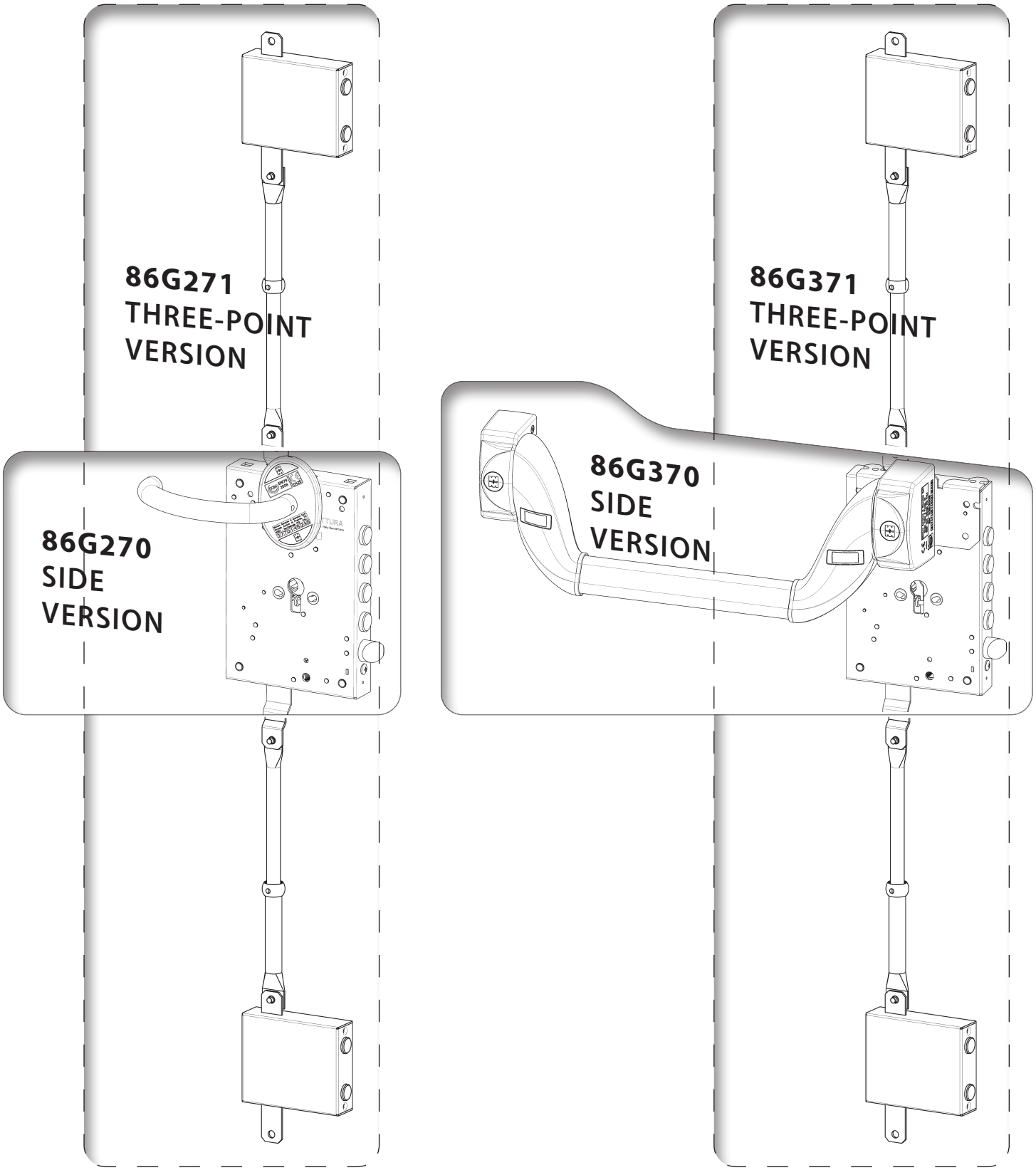

MOTTURA

IMPORTANT WARNING

The security characteristics of this product are essential for guaranteeing the safety of individuals and for conformity to EN 179 and EN 1125. DO NOT modify this product in any way, except as described in these instructions.

The anti-panic device has been certified for use on single leaf doors no larger than 2520 x 1320 mm (H x W) with weight over 200 kg.

As required by the standard, it is recommended that the owner of the business and/or their authorized representative perform the following routine maintenance checks at intervals of no more than one month:
- ***inspect and activate the anti-panic device to verify that all components are in a satisfactory working condition;***
- ***verify that the holes on the striker plate are not obstructed;***
- ***verify that no locks or other locking devices have been added on the door in addition to the initial device;***
- ***verify the rules governing the installation and maintenance established by the Ministerial Decree of 11/03/2004;***
- ***with a dynamometer, periodically check the working force needed to open the exit device. Make sure the working force has not changed significantly from the force measured at the time of installation.***

The lock operating device should be lubricated, using Mottura lubricant (for locks), once a year or whenever a stiffening of the mechanisms is detected. Do not use oil or other lubricants: the use of such substances promotes the deposit of dust and fragments that may affect the correct operation of the lock.

Warning - Mottura Serrature di Sicurezza S.p.A., thanks you for your confidence in choosing this product and recommends:
· to read the instructions carefully before proceeding with the installation;
· to hand over all the instructions to the user by the installer;
· to keep the instructions for future reference and attach the receipt to validate the warranty;
· to contact the dealer only if a problem occurs.

The characteristics of the products described in these instructions may be subject to change by Mottura Serrature di Sicurezza S.p.A. at any time without prior notice.

WARRANTY conditions - This product tested by Mottura Serrature di Sicurezza S.p.A. is guaranteed against all manufacturing defects for the duration of the period stipulated by applicable Italian legislation from the date of purchase demonstrated in a fiscal receipt.
Guarantee claims may only be accepted upon presentation of the fiscal sales receipt, containing the details identifying the product, to technical support personnel. The guarantee covers the replacement or repair of parts found to have manufacturing defects. The guarantee does not cover transport costs to and from the technical support centre, which remain at the sole expense of the customer. In the event of a recurring fault of the same cause, or of an unrepairable fault, Mottura Serrature di Sicurezza S.p.A., at its sole discretion, may decide to replace the entire product. The guarantee will continue to cover the replacement product until the expiry of the original contract.
If a home call-out should be necessary, the customer is required to pay - if asked to- a call-out fee for the travel expenses of the authorized service personnel. The customer is solely responsible for any transport damage in the event of direct shipment, or the sole responsibility of the authorised technician where the product is collected and transported by the technician.

Limited responsibility - Not covered under warranty are damages resulting from the improper installation not in accordance with the instructions attached to the product, negligence, carelessness or inappropriate operation, maintenance by unauthorized personnel, transport without due care and attention and in any case by circumstances that cannot result from manufacturing defects.
Mottura serrature di sicurezza S.p.A. declines any liability for possible damages caused to persons or property resulting from the failure to observe the indicated precautions for use.

GOOUT locks are certified by the ICIM Institute, based on reference standards, with regard to each complete component (specifically: lock, switch-locks, bars). Any modification of the product assembly or installation not conforming to this instruction manual will automatically void such certification. In these cases, the party that makes such modification/replacements will be responsible for conformity to the reference standards.

General information - To ensure good operation of the lock and panic exit device, check that the door is in good condition (planarity, solidity, rigidity). The door and frame must be built of sufficiently rigid material, such as welded steel or aluminum profiles, to ensure that any distortion during use does not exceed 5 mm at any position of the lock attachment points. Also check that the device and the door open and close without any obstruction.
If the panic exit device is to be installed on a glass door, the glass MUST be tempered and laminated. Panic exit devices are not intended to be used on doors that open in both directions (entrance and exit) unless specifically designed by the manufacturer.
If you have to use a door closer or a closing switch to return the door to closed position, be careful not to make the door difficult to use by children, the elderly, and invalids.
Before assembling a panic exit device on a smoke/fire door, check the fire resistance certification for the door on which the exit device was fitted during tests to ensure it is suitable for use on the fire door. It is extremely important NOT to use an exit device on a fire door whose fire resistance time exceeds the time for which the device was approved.
A sign stating "Push bar to open" or a pictogram (photo to the right) must be placed on the inside of the door immediately above the horizontal bar or on the bar itself if the bar has a flat surface area sufficient for the required letter size. The pictogram must have an area not smaller than 8,000 mm2, with white letters on a green background. The pictogram must be positioned so that the arrow points to the exit device, when installed (EN 7546 – Italian Decree Law 493 of 14/08/1996).

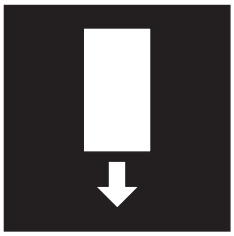

INSTALLATION INSTRUCTIONS

EMERGENCY HANDLE — UNI EN 179

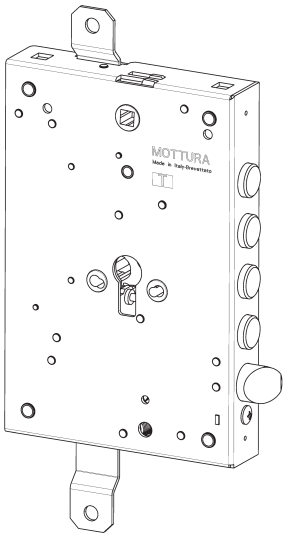

PANIC-BAR VERSION — UNI EN 1125

Center the plate (supplied) on the lock by using the two pins on the lock.

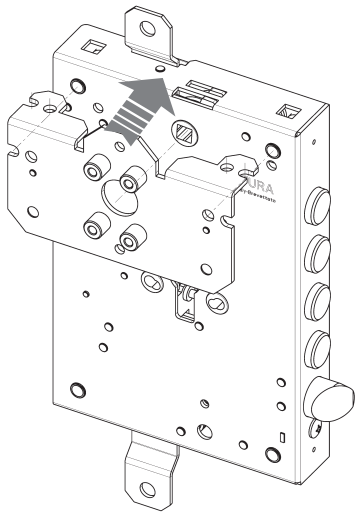

Fix the lock to the frame (door fixing surface) with M6 screws (not supplied), using the bushings (ref. B) on the lock. For side connection, use M6 cage nuts (ref. A). When calculating lock fixing position, remember that the anti-panic device/emergency handle is located from 900 to 1100 mm above finished floor level with the door closed (if you know that most of the people using the rooms are children, consider lowering the bar/handle).
N.B. Use all of the fixing points A (side connections) or B (bushings) when mounting the lock.

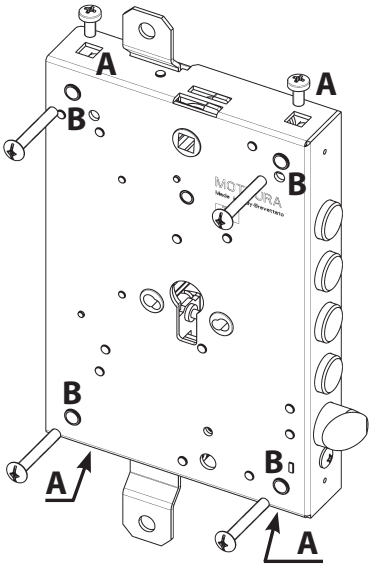

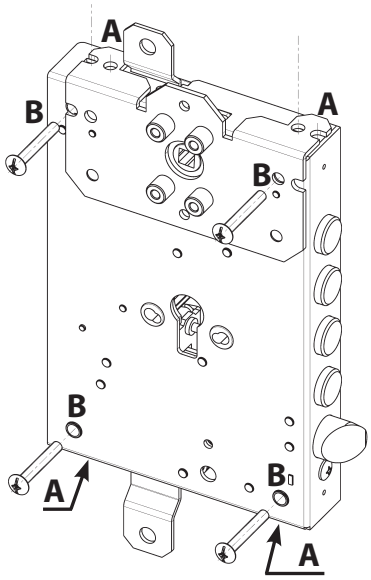

For the lock to work correctly, after mounting there must be maximum clearance of 4 mm between the deadbolt (in retracted position) and the door jamb (or striker plate).

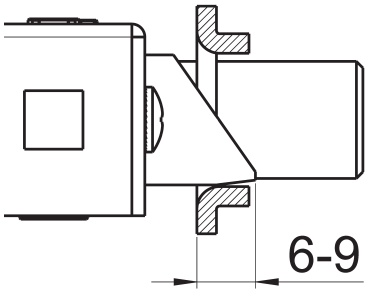

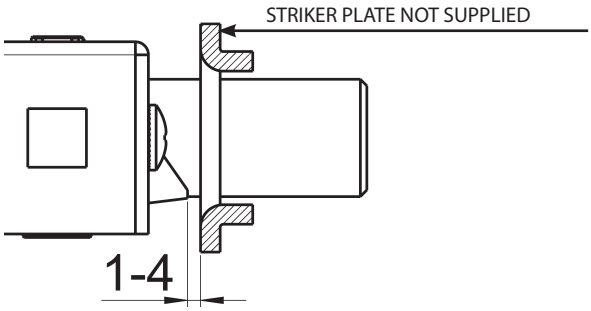

EMERGENCY HANDLE — UNI EN 179

PANIC-BAR VERSION — UNI EN 1125

A *= SIDE CONNECTIONS - **B** = BUSHINGS - **M** = HANDLE*

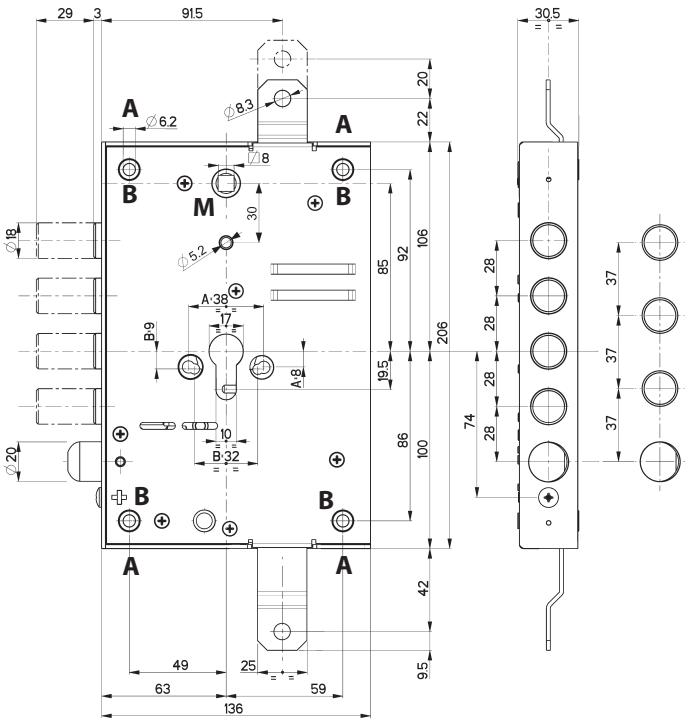

SIDE VERSION

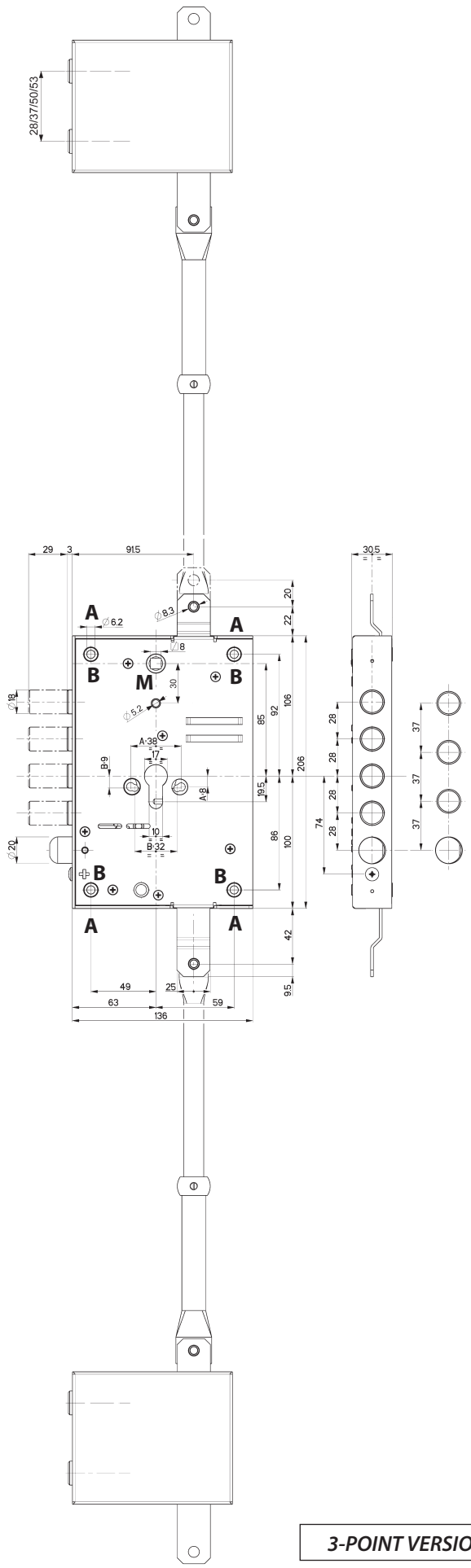

3-POINT VERSION

EMERGENCY HANDLE

UNI EN 179

Drill the inner door panel (refs. M, E). Drill Ø6 (ref. G) only in case of outside handle. Holes with reference F indicate the fixing positions of the handle escutcheon (use appropriate screws – not supplied).

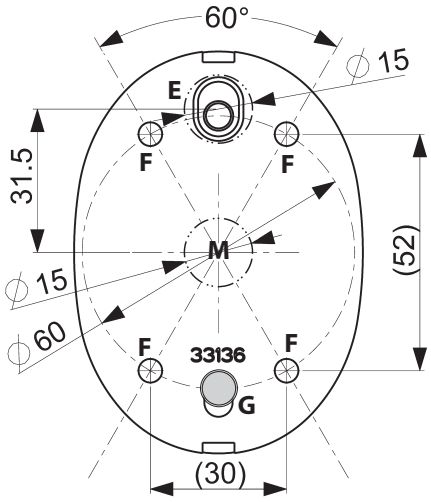

PANIC-BAR VERSION

UNI EN 1125

Drill the inner door panel (refs. P, M on lock side and ref. P on idle device side) using the support plate as drilling template. Remember that the horizontal bar should be installed in such a way as to provide maximum useful length (at least 60% of door width), checking the correct positioning/alignment of the fixing holes and correct alignment between the support surfaces of the two devices.

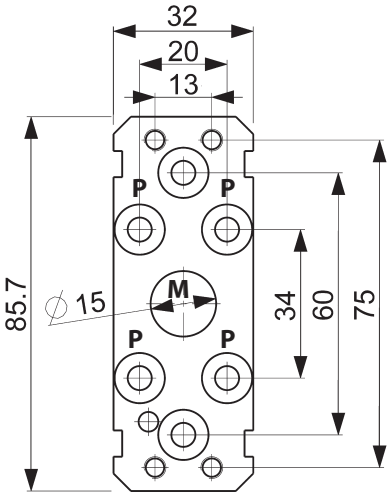

Only if the door/panel is insufficiently rigid, position the spacer bushings (optional, ref. X) on the pins located on the lock plate and the square pin (supplied) in its seat, then cut these parts to measure, bringing the bushings flush with the panel and the square pin protruding 10 mm from the panel.

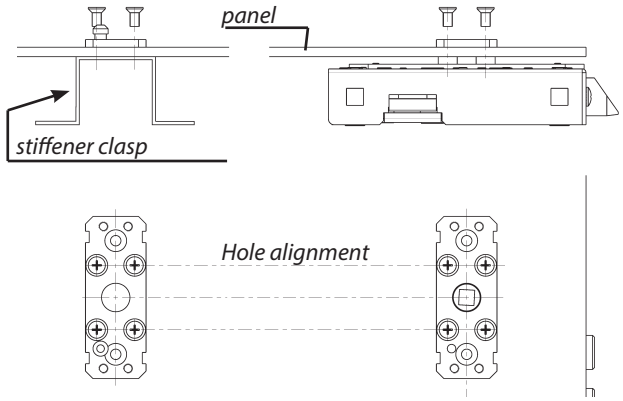

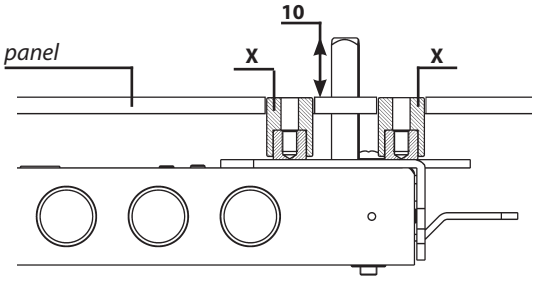

Exploded view

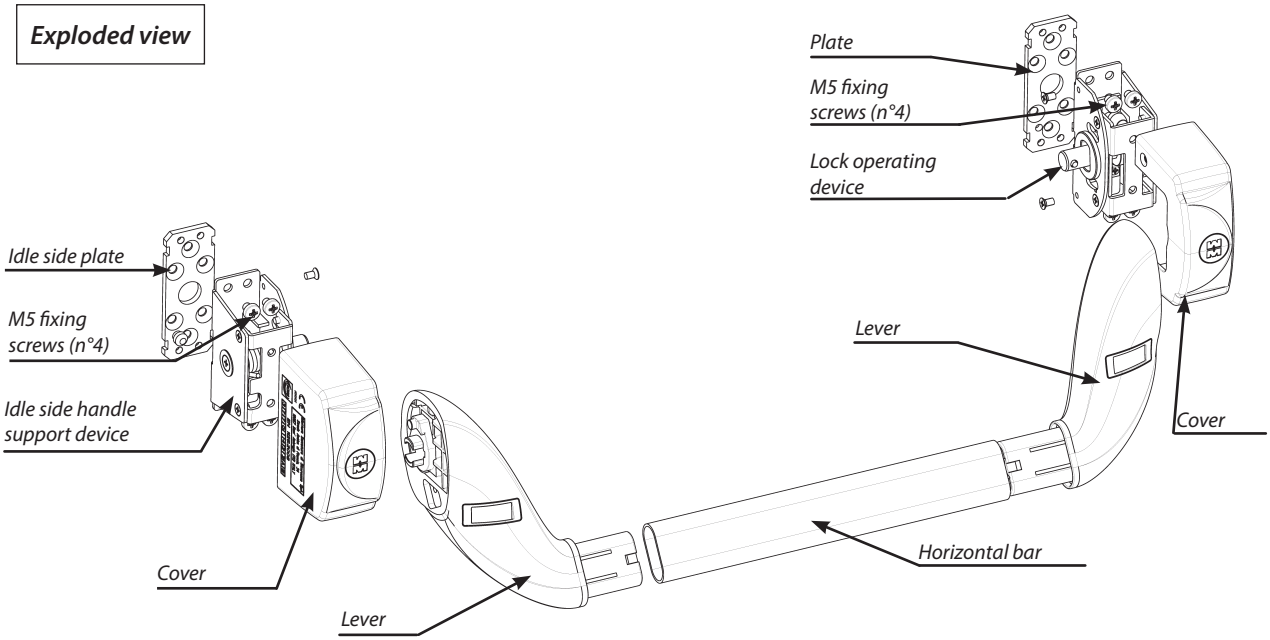

PANIC-BAR VERSION

UNI EN 1125

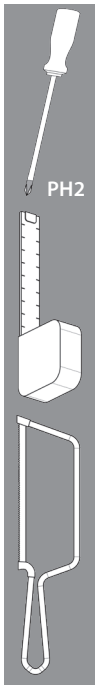

With 4+4 M5 screws (ref. V1), fix the main device support plate and the idle side plate on the inside panel using fixing pins P.
N.B. The support surface for the idle side plate must be sufficiently rigid (use a stiffener clasp).
Measure the distance between the two external faces of the plates previously fixed on the door panel. Subtract 205 mm from the distance to find the length to which the profile of the horizontal bar is to be cut.

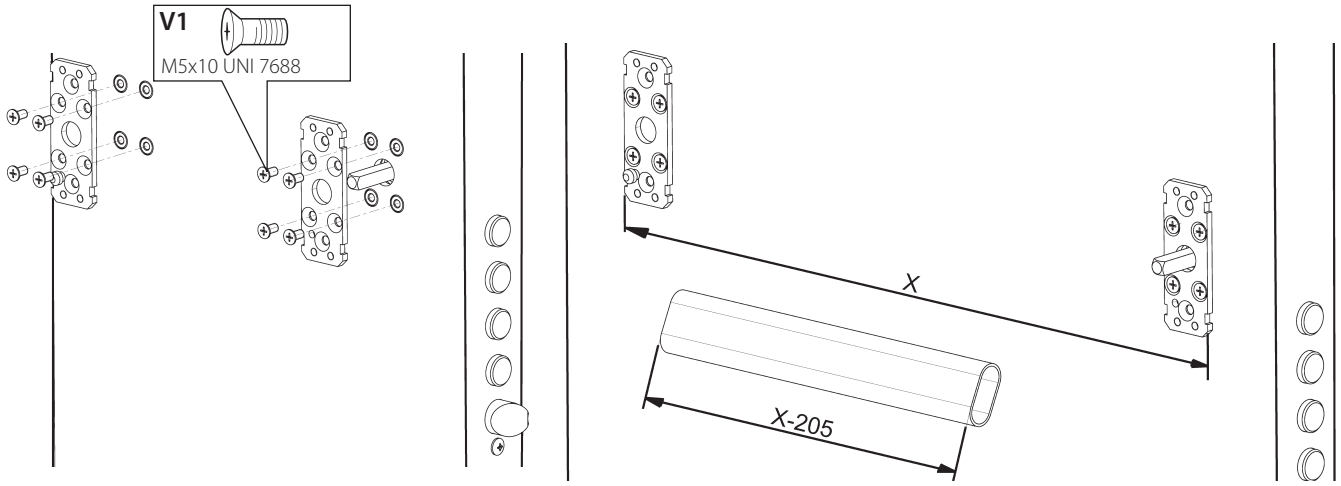

With 4 M5 screws (Ref. V2), fix the lock operating device on the internal panel, making sure that the handle square plate is positioned as shown in the detail.

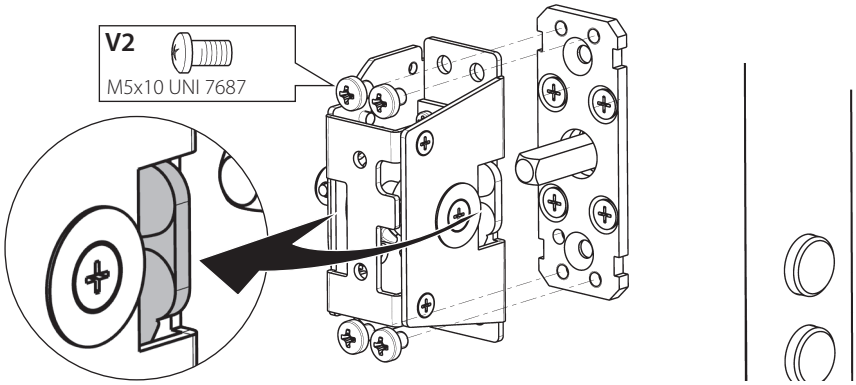

Mount the secondary device on the idle side.

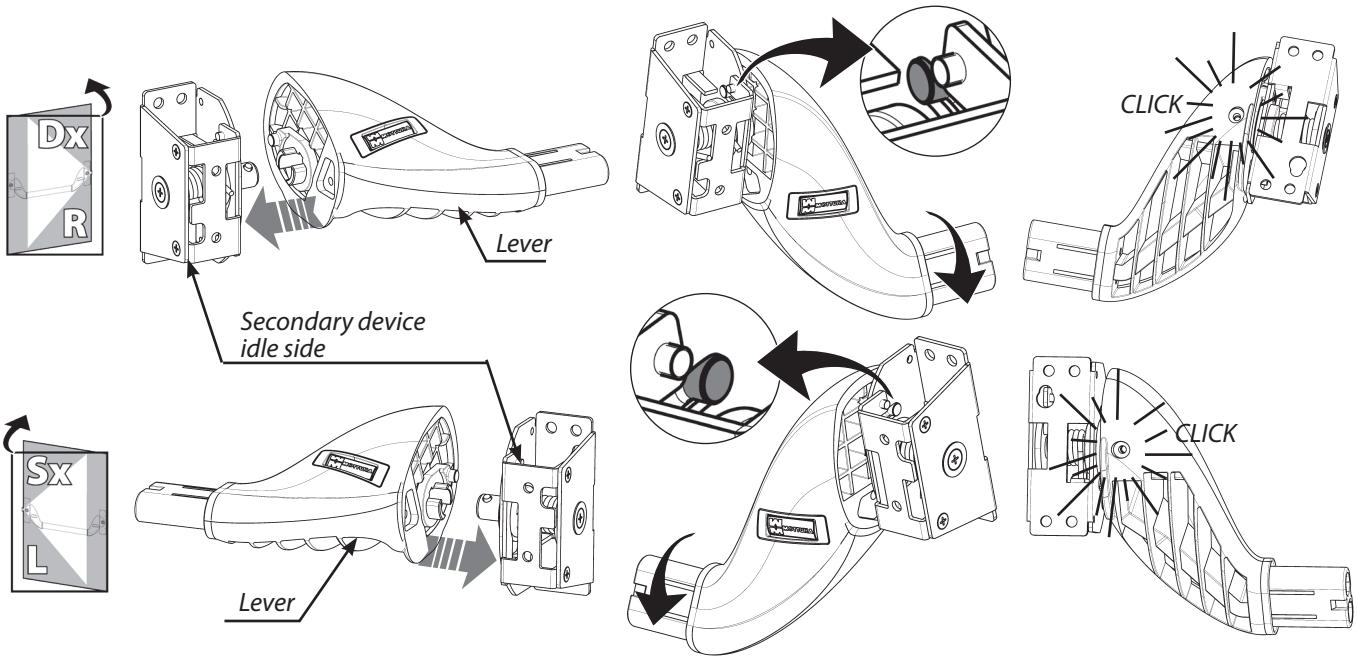

PANIC-BAR VERSION

UNI EN 1125

Mounting the bar

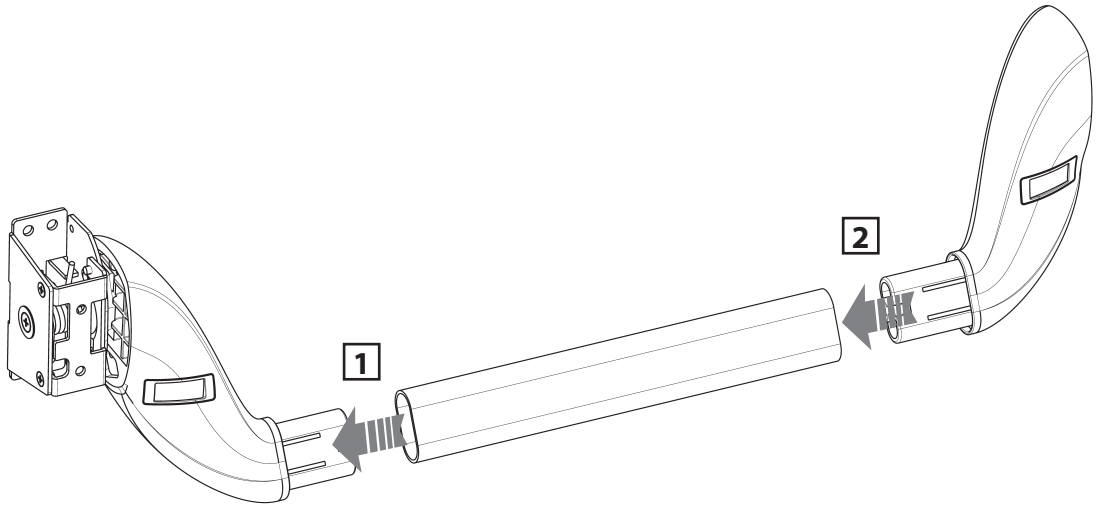

Mount the bar on the door by inserting first the main device and then the secondary device, using the support pin on the idle side plate.

PH2

Press the pin to uncouple the device.

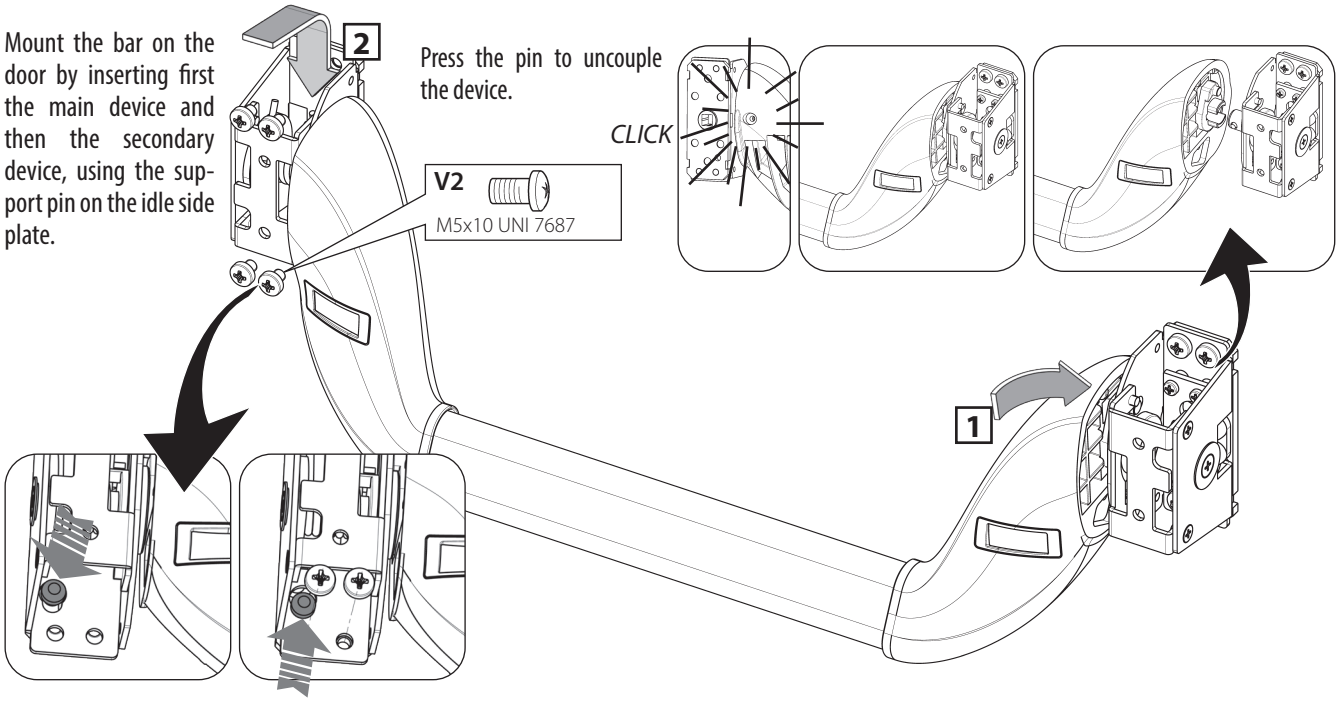

Mounting covers on main and secondary device.

PH2

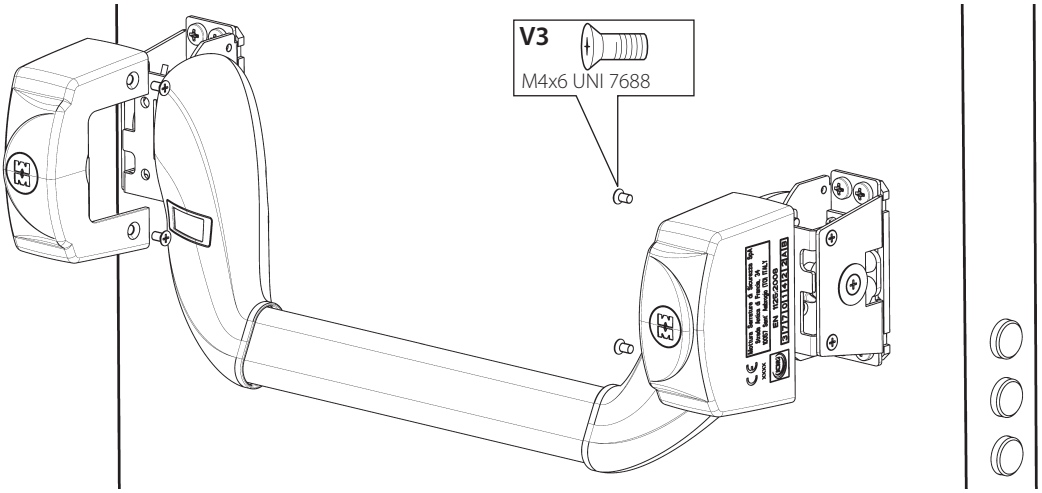

EMERGENCY HANDLE

UNI EN 179

CH 3-4

INSIDE HANDLE ONLY : With 4 screws (ref. V4, not supplied) suitable for the type/thickness of the door, fix the escutcheon support plate, insert the plastic washer and the escutcheon cover, then fix the handle with the grub screw.

INSIDE/OUTSIDE HANDLE : With 2 M6 screws (not supplied) with length suitable for the thickness of the door, fix the escutcheon support plates, insert the plastic washer and the escutcheon cover, then fix the handles with the grub screw.

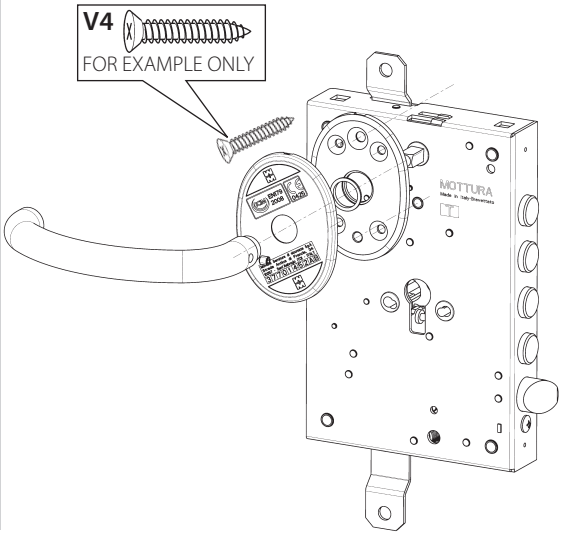

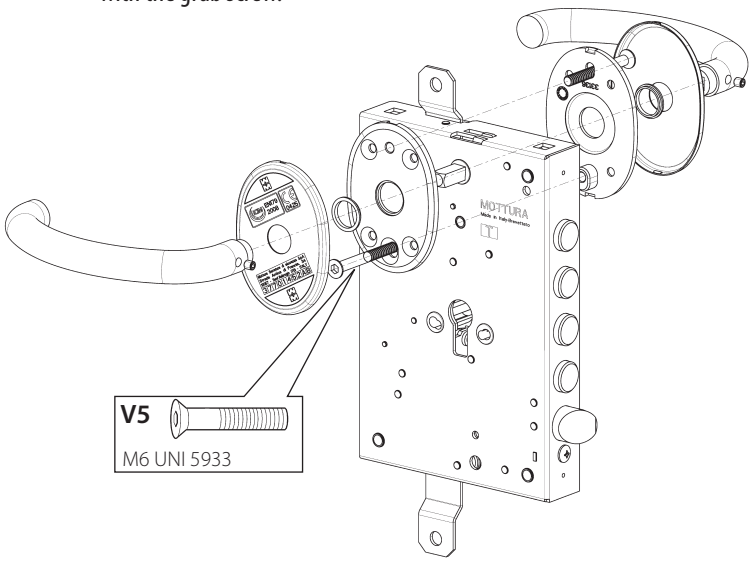

EMERGENCY HANDLE

UNI EN 179

PANIC-BAR VERSION

UNI EN 1125

The hole on the striker plate for entrance of the latchbolts and deadbolt must have the dimensions shown in the following figure (see page 4 for distances between centers of latchbolts).

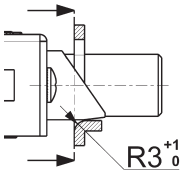

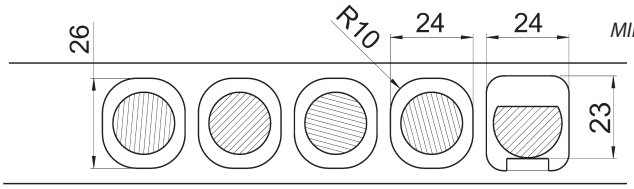

MINIMUM DIMENSIONS

N.B. The latchbolt hole for the deadbolt must allow opening even when the door is subject to pressure (EN 1125).

PH2

FIXING THE CYLINDER: For good operation of the lock, we advise you to install a MOTTURA CHAMPIONS® Europrofile double or half-cylinder (depending on the application). DO NOT use cylinders with knobs. For better protection of the cylinder from outside the door, we advise you to use MOTTURA DEFENDER® systems.
See MOTTURA catalogs for these articles (not included in the pack).

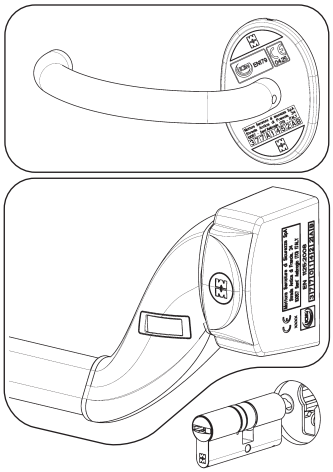

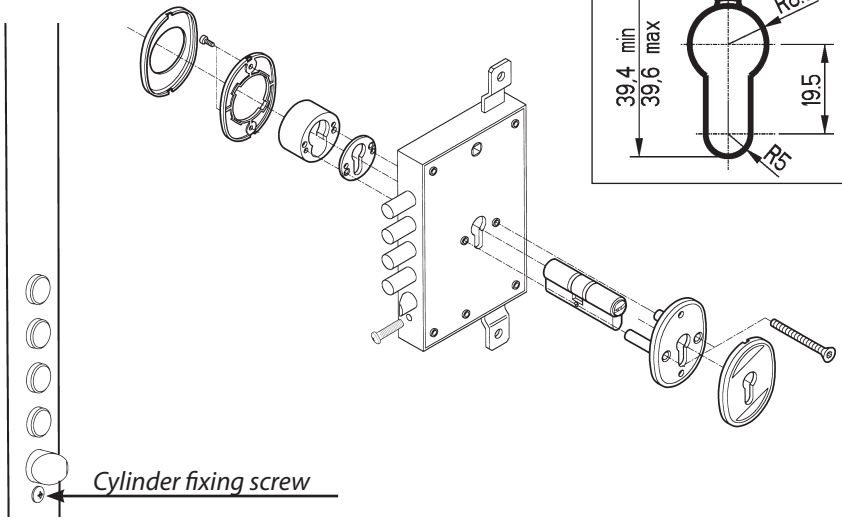

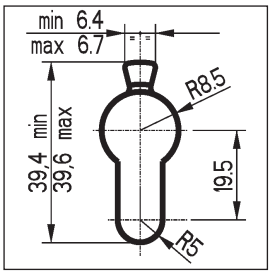

N.B. In case of version with ½ cylinder, use the screw for locks with 30mm thickness "B" TYPE (CP4B..- CP8B....).

EMERGENCY HANDLE

UNI EN 179

PANIC-BAR VERSION

UNI EN 1125

CONFIGURATIONS :

INSIDE	OUTSIDE

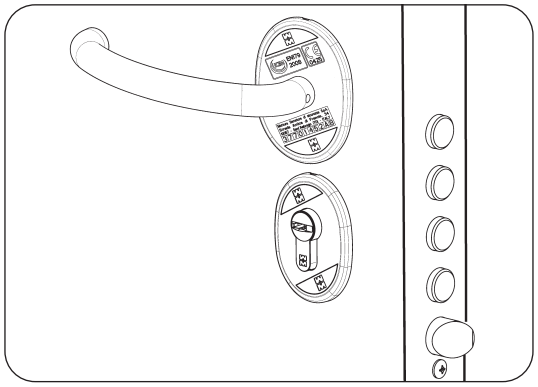

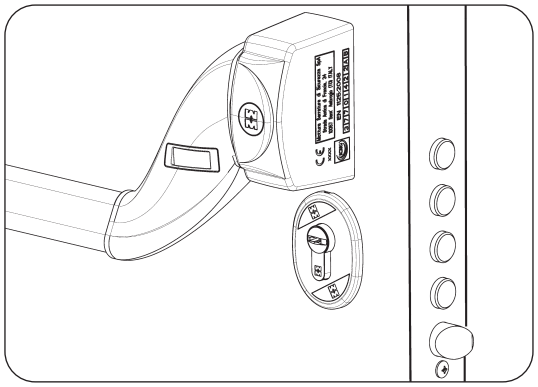

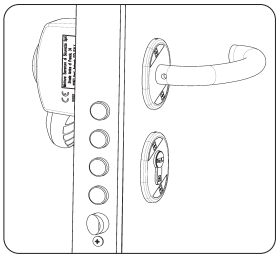

Double cylinder + handle version

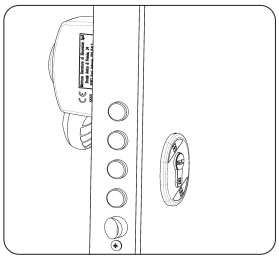

Double cylinder version

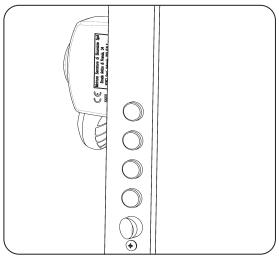

half cylinder version

N.B. The cylinder, escutcheons, and outside handle are not included in the pack.

When installation is complete, check good operation of the device as follows: with the door closed (cylinders turned), push the horizontal bar/handle and check that the door opens with a light push and without any impediment (see the reference standard for load values and tests).

EMERGENCY HANDLE — UNI EN 179

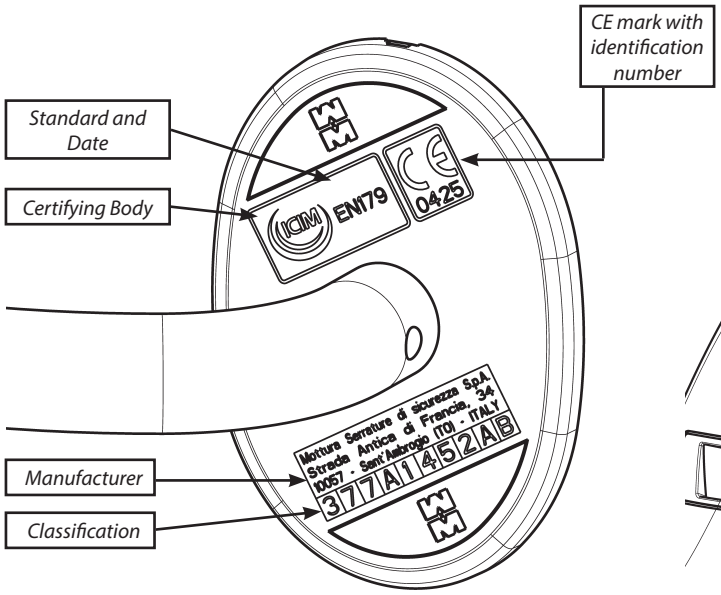

PANIC-BAR VERSION — UNI EN 1125

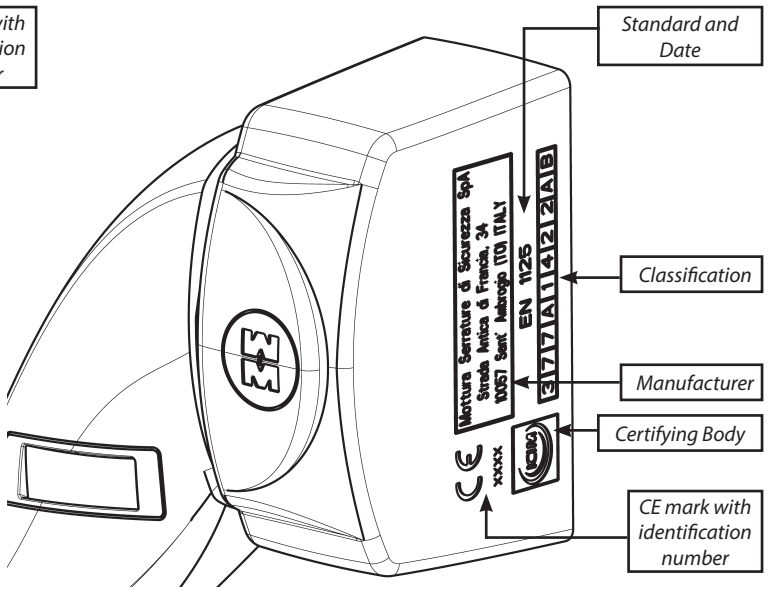

EMERGENCY HANDLE — UNI EN 179	3	7	7	A	1	4	5	2	A	B
PANIC-BAR VERSION — UNI EN 1125	3	7	7	A	1	4	2	2	A	B

Category of use - *Only one level 3 category of use is identified*

Duration - *Two categories are identified:*
- *level 6 — 100.000 cycles*
- *level 7 — 200.000 cycles*

Door mass - *Three categories are identified:*
- *level 5 — up to 100 kg*
- *level 6 — up to 200 kg*
- *level 7 — over 200 kg*

Fire resistance - *- Three categories are identified:*
- *level 0 not suitable for use on fire/smoke-proof doors*
- *level A suitable for use on smoke-proof doors*
- *level B suitable for use on fire/smoke-proof doors*

*

Safety for people - *Only one category of level 1 is identified*

Corrosion resistance - *Two categories are identified:*
- *level 3 — high resistance*
- *level 4 — very high resistance*

Security for property - *Four categories are identified:*
- *level 2 — 1.000 N*
- *level 3 — 2.000 N*
- *level 4 — 3.000 N*
- *level 5 — 5.000 N*

Bar projection - *Two categories are identified:*
- *level 1 projection up to 150 mm (large projection)*
- *level 2 projection up to 100 mm. (standard projection)*

Bar activation type - *Two categories are identified:*
- *type A activation by push-bar*
- *type B activation by touch-bar*

Field of application of the doors - *Three categories are identified:*
- *type A single door, double door: active or inactive leaf*
- *type B single door only*
- *type C double door, inactive leaf only*
- *type D inward opening of single-leaf door*

* The article is suitable for use on fire doors but must be tested on the door. Replacement is possible only on fire doors bearing the specific approval showing the GOOUT antipanic device.

INSTALLATION SHEET

CLIENT			
ADDRESS	CITY	DISTRICT	POST CODE
HEAD OFFICES		No. DOORS	

DOOR CONFIGURATION

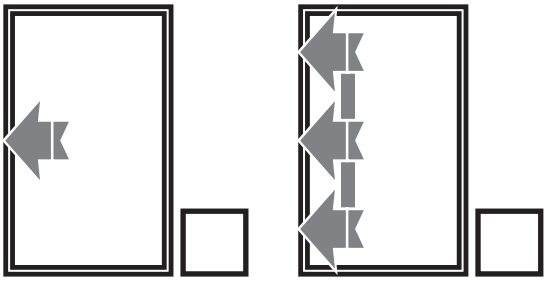

INSTALLED DEVICES

No.	DEVICE CODE	DATE	OPERATING FORCE (N)	OUTCOME (max 80N)		NOTES	SIGNATURE
				POS	NEG		
				POS	NEG		
				POS	NEG		
				POS	NEG		
				POS	NEG		
				POS	NEG		
				POS	NEG		
				POS	NEG		

INSTALLER DATA

COMPANY NAME			STAMP AND SIGNATURE
ADDRESS			
POST CODE	CITY	DISTRICT	
TEL.	EMAIL		

MAINTENANCE SHEET

MAINTENANCE ENGINEER DATA

COMPANY NAME			STAMP AND SIGNATURE
ADDRESS			
POST CODE	CITY	DISTRICT	
TEL.	EMAIL		
MAINTENANCE START DATE			

SCHEDULED INSPECTION LOG

No.	ITEM CODES	DATE	OPERATING FORCE (N)	OUTCOME (max 80N)		NOTES	SIGNATURE
				POS	NEG		
				POS	NEG		
				POS	NEG		
				POS	NEG		
				POS	NEG		
				POS	NEG		
				POS	NEG		
				POS	NEG		
				POS	NEG		
				POS	NEG		
				POS	NEG		
				POS	NEG		
				POS	NEG		
				POS	NEG		
				POS	NEG		
				POS	NEG		
				POS	NEG		
				POS	NEG		
				POS	NEG		
				POS	NEG		

99289GB - 12/21 - a_025176

COMPANY WITH
MANAGEMENT SYSTEM
CERTIFIED BY DNV
ISO 9001 • ISO 45001