POWERED ELECTRONIC LOCK

INSTALLATION INSTRUCTIONS

XMODE F 1.0

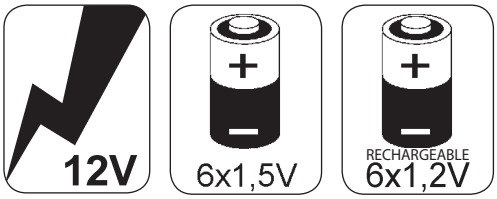

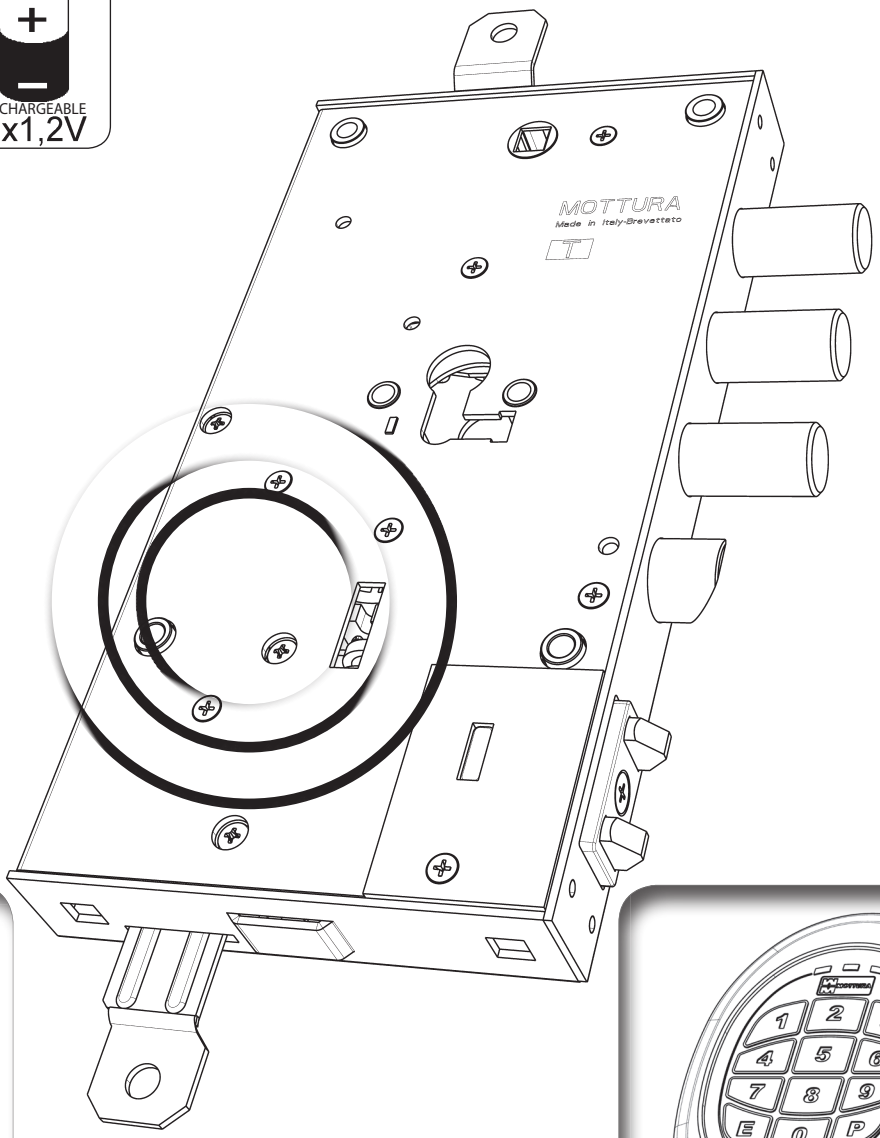

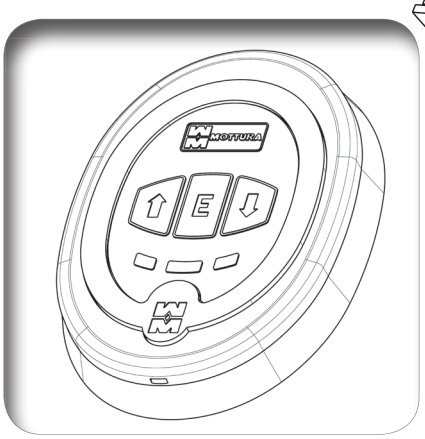

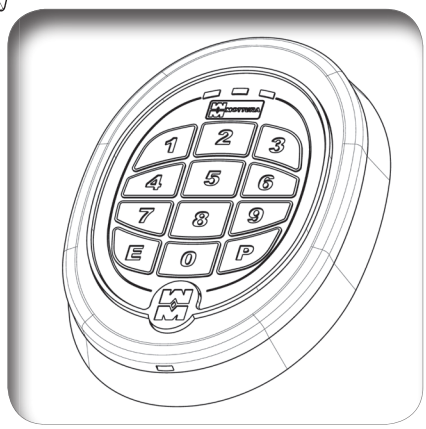

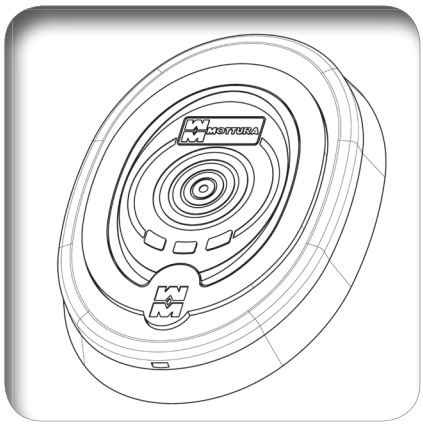

MOTTURA

TABLE OF CONTENTS

1 - GENERAL INSTRUCTIONS

Mottura Serrature di Sicurezza S.p.A. thanks you for choosing this product and reminds you :

- To read all of these instructions very carefully before installing the lock or doing any maintenance work on the product.
- That all assembly and connection procedures must be done in conformity to the rules of Good Practice and to current law. DO NOT install this product in rooms or atmospheres at risk of explosion or in the presence of flammable fumes/gases.
- Do not install the lock on doors with risk of contact with water or atmospheric agents if not properly protected.
- To switch off the power supply and disconnect all live parts before doing any installation or maintenance work on the product. Take all possible precautions to eliminate the risk of electrical shock when doing the installation or maintenance procedures described in this manual.
- The installer must deliver these instructions and all of the maintenance instructions to the user.
- Keep these instructions for future reference and attach the sales receipt to validate the warranty.
- In case of problems contact authorized dealers only.

This manual explains how to connect the lock according to a logical-functional sequence.
First connect all of the selected peripherals and then the power supply.

1. Connecting the escutcheons (allow lock to be controlled on door)
2. Connecting the remote control units (allow remote control of the lock)
3. Connecting the power supplies.

If you have to disconnect the wires, do the above steps in the reverse order, i.e., always disconnect the power supplies first.
Mottura Serrature di Sicurezza S.p.A. may change the characteristics of the products described in these instructions at any time and without notice.

1.1 - WARRANTY TERMS

This product has been inspected by Mottura Serrature di Sicurezza S.p.A. and is guaranteed to be free of all manufacturing defects for the time specified by current Italian law, starting on the date of purchase indicated on the sales receipt.
The warranty is in force if the sales receipt, showing details identifying the product, is exhibited to customer service personnel.
The warranty covers the replacement or repair of parts found defective at origin due to manufacturing defects. Costs of shipping to and from service centers will be paid by the customer.
In case of repeated malfunctions of the same type or unrepairable defects, Mottura Serrature di Sicurezza S.p.A. may, at its own discretion, replace the complete product. The warranty on the replaced product will continue until expiration of the original warranty.
If work is necessary at the customer's home, the customer will be required to pay a charge for the costs of transfer of authorized technical personnel. Transport will be at the customer's risk if the product is sent by the customer and at the authorized technician's risk if the product is picked up and transported by the technician.

1.2 - LIMITS OF LIABILITY

The warranty does not cover damage due to:

- negligence, carelessness or use in any manner not described in these instructions
- lack of protection of the lock prior to carrying out any work operations on the door, such as drilling or welding (welds, panel holes, structure holes, etc.), which may generate waste materials that will hinder the correct operation of the lock upon entering its mechanism
- maintenance performed in any manner not described in these instructions or by unauthorized personnel
- use of non-original accessories/components Mottura
- transport without the necessary precautions

and from any circumstances that cannot be attributed to manufacturing defects.
Work temperature: -10°C to +55°C. The batteries guarantee correct operation of the lock in the specified temperature range. If such temperature extremes are approached or exceeded, battery performance may decrease rapidly, with possible malfunction of the electrical part.
In case of extremely low temperatures, it is advisable to power the lock from the mains by using the 230/12 V transformer.
In addition, Mottura Serrature di Sicurezza S.p.A. declines all liability for any damage to persons or property deriving from failure to observe all of the precautions described herein.

N.B. Mechanical lock operation is guaranteed even when the electronics of the lock has no anomaly. <u>This excludes any electronic safety level</u>. Mechanical keys should therefore only be used by the owner and/or by extremely trustworthy persons.

2 - INSTALLATION

Fix the lock to the door structure by using all of the fasteners: side attachments (A), bushings (B) or mortise-type (C) (Fig. 1). In order to work correctly, the lock should be fixed in a vertical position. The lock may not work properly if installed or used in a different position. For correct operation of the lock, the spring latch must be able to protrude freely without frictioning when the door is open or closed.
If necessary, drill spaces in the door structure to hold the battery pack and the box for the electronic board (supplied in the pack for the selected version) in a non-binding position defined only by the length of the wires and by internal dimensions due to door configuration (opening limiter, switchlocks, etc.). Drill the frame for the door status sensor. For these drillings, see the attached mounting diagram in Fig. 2.
Place correctly the striker according to instructions TOP/BOTTOM indicated on the PCB. ,Set, if necessary, the the detector contacts depth on the lock by means of the adjustment screw (Fig.2A) at a maximum distance of 4 mm from the keeper. DO NOT lubricate the contacts, periodically clean with alcohol.
If you are mounting switchlocks, always provide sufficient clearance between the bar and the upper and lower tabs both when the lock is open and when it is closed, so as to prevent strain that could damage the motor. Fasten the battery pack, if required, and wire it as shown in paragraphs 3, 4, 5, 6 (diagrams Fig.3RH and Fig.3LH), (depending on door version), preparing the connections for the board holder, lock and the internal and external escutcheons using the wires supplied as standard.

Protect the lock before doing any work on the door that could produce waste material (soldering, drilling of panels, drilling of structure, etc.) that might enter the lock and impair its functioning. Do not insert the batteries into the battery holder until finished fixing to avoid short circuits that may damage the system.
WARNING! *When the door is completely mounted and perfectly positioned, run the first checks on the lock (opening/closing) in mechanical mode to make sure there is no frictioning on the levers (bars/switchlocks) or on the key when turning.*
These problems could impair correct electronic operation of the lock and cause permanent malfunction. Mottura Serrature di Sicurezza S.p.A. declines all liability if this procedure is not performed and, in such case, all warranties on the product will lapse.

If a mains powered connection is provided, it is advisable to use grommet 99144 (not included) between fixed upright and leaf, attaching it as shown in the detail (Fig. 3RH and Fig. 3LH) and instructions attached to the grommet pack.

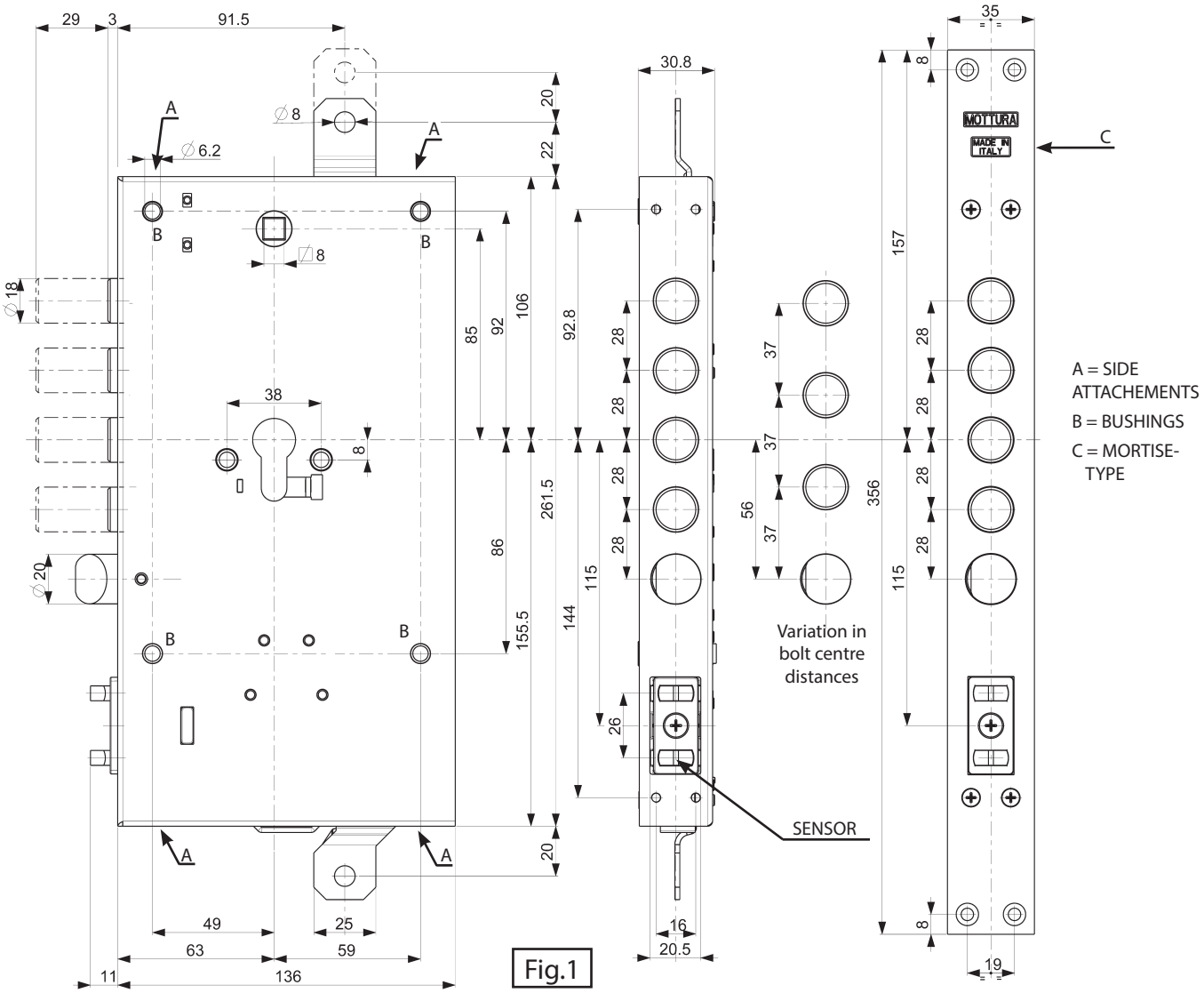

Fig.1

2.1 - DRILLING DIAGRAM (CHANGEABLE POSITIONS) AND DIMENSIONS

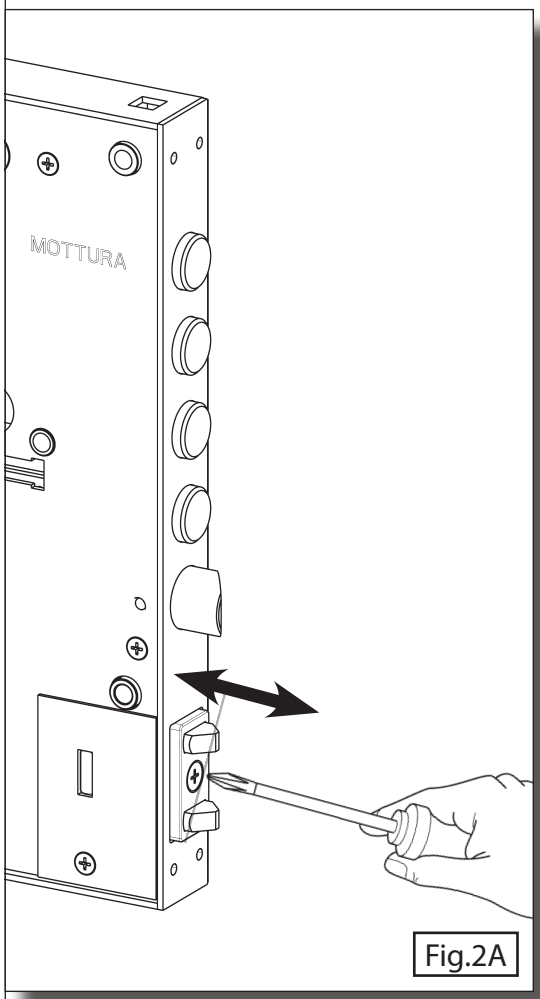

Fig.2A

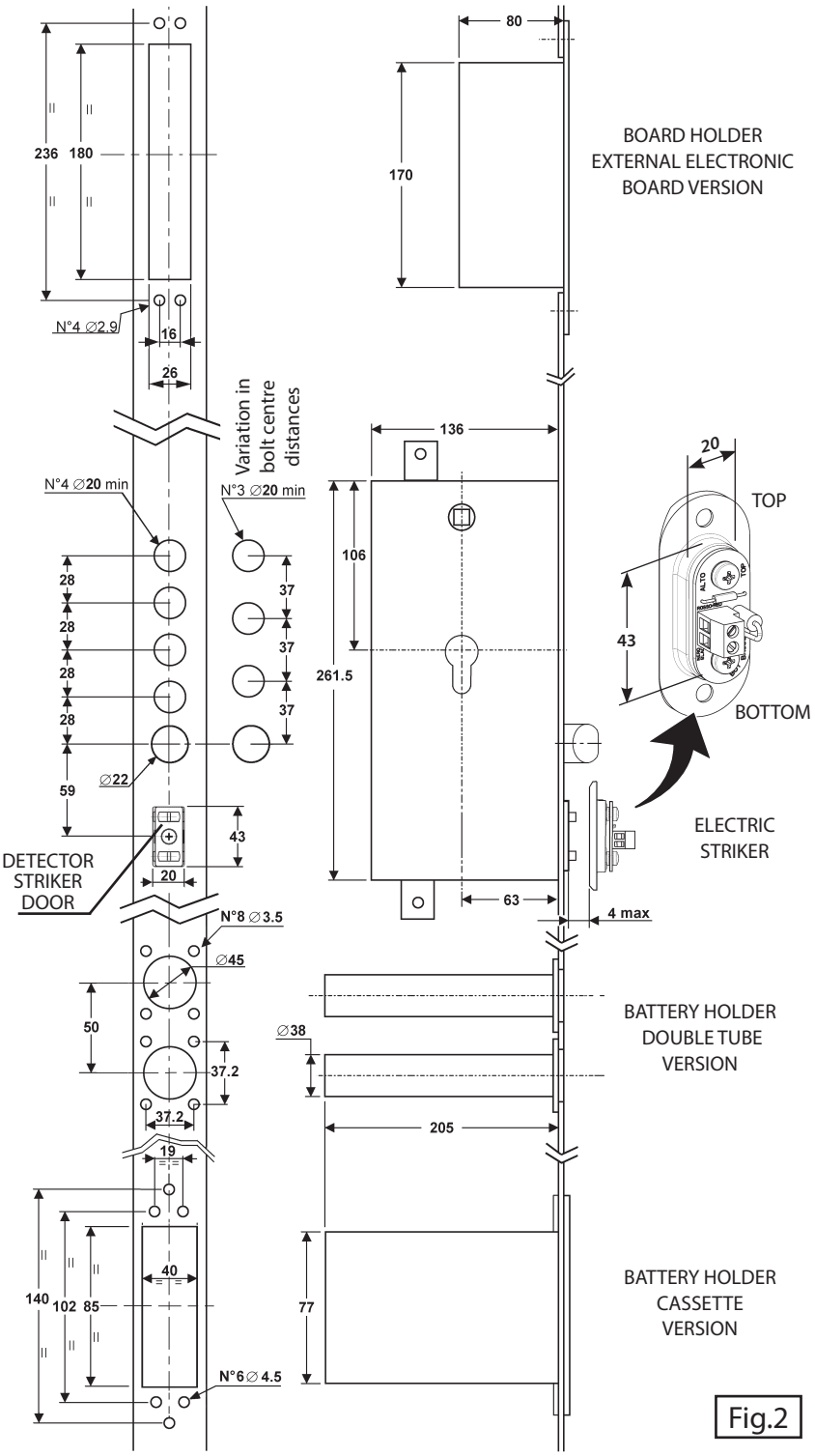

Fig.2

2.2 - CYLINDER FIXING

For proper functioning of the lock, we recommend installation of a MOTTURA CHAMPIONS® double or half Europrofile cylinder (according to application) (DO NOT use cylinders with knobs). For better protection of the cylinder from the outer side of the door, we recommend the use of MOTTURA DEFENDER® systems. For these articles (not included in the pack), please see MOTTURA catalogs. Alternatively use European cylinder with the dimension shown in the diagram.

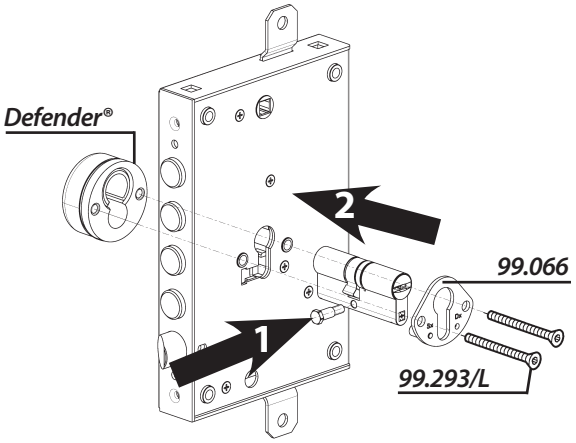

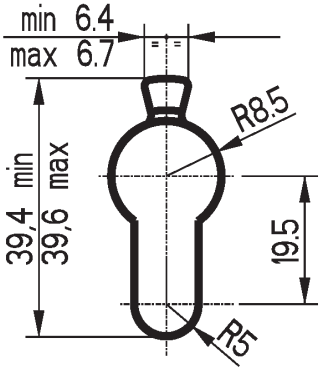

3 - ESCUTCHEONS

3.1 - INTERNAL BOARD VERSION

The escutcheon is designed for installation on the door panel in a position near the two other user work zones (handle and cylinder escutcheon). When installing, use the drilling diagram shown below and remember that the connection cable is 1000 mm long. For installation other than as indicated, check that the cable length allows for such installation without hinder movement of the bars or limiter; otherwise, contact your authorized dealer. Before fixing the escutcheon to the panel (with the 2 screws equipped), position the sealing strip in its seat in the rear of the escutcheon (see detail – rear view), then insert the connector securely into place. When fixing is complete, insert the metallic escutcheon cover, which is available in different finishes. The escutcheons have an IP51 protection rating.

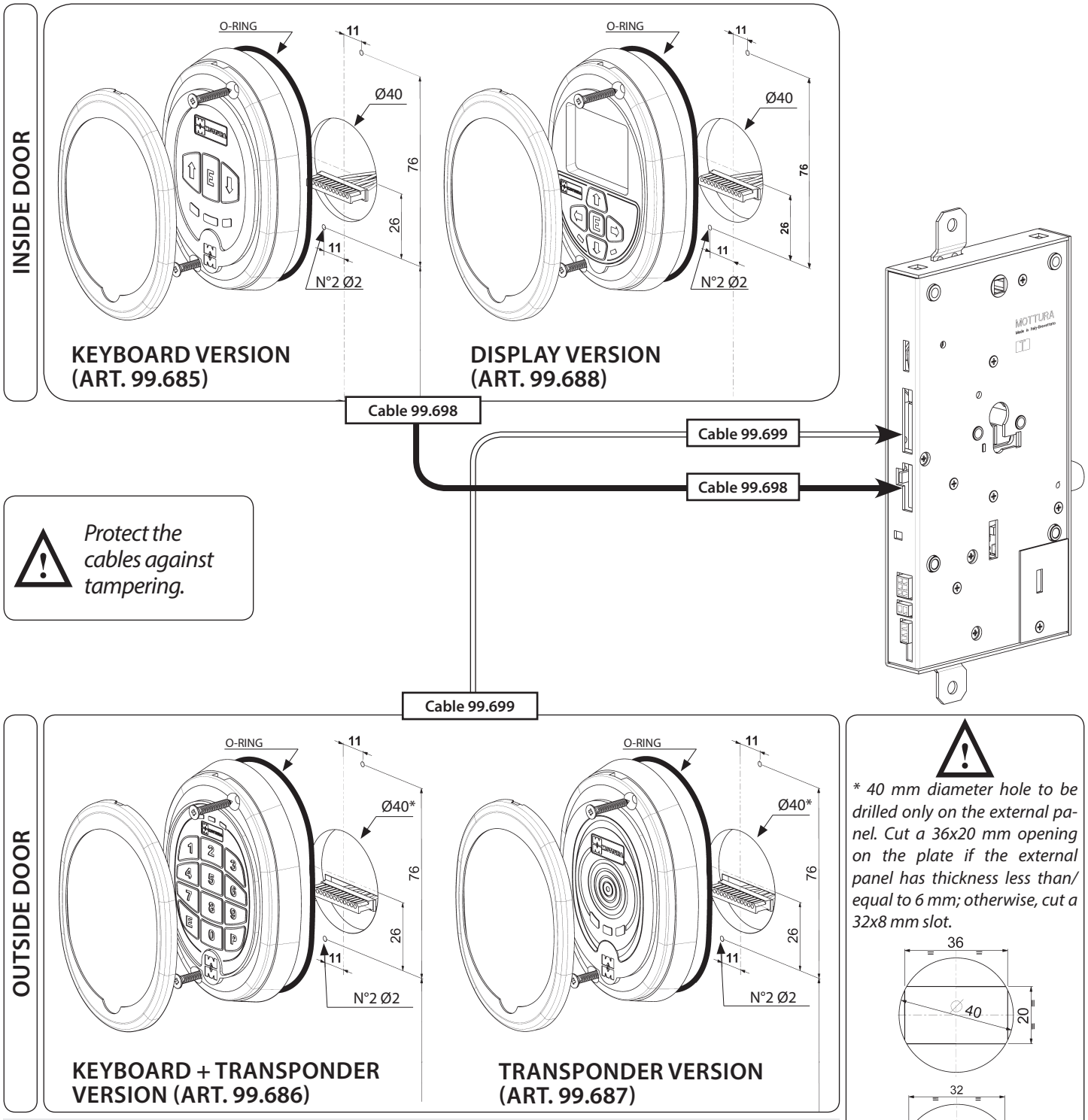

Protect the cables against tampering.

** 40 mm diameter hole to be drilled only on the external panel. Cut a 36x20 mm opening on the plate if the external panel has thickness less than/ equal to 6 mm; otherwise, cut a 32x8 mm slot.*

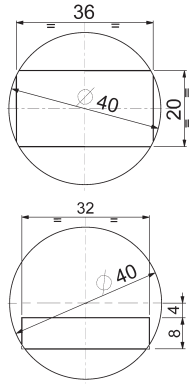

The internal and external escutcheons are interchangeable. You can replace keyboard version (Art.99685) with display version (Art. 99688) and the transponder-only escutcheon (Art. 99687) with the keyboard/transponder escutcheon (Art. 99686) at any time. Always switch off the power supply before making any replacement. Remember that all of the codes and transponder keys are memorized in the lock card.

3.2 - EXTERNAL BOARD VERSION

Connections for version with board external to the lock.

INSIDE DOOR

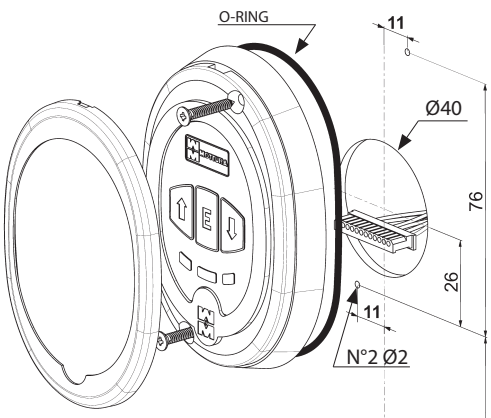

KEYBOARD VERSION (ART. 99.685)

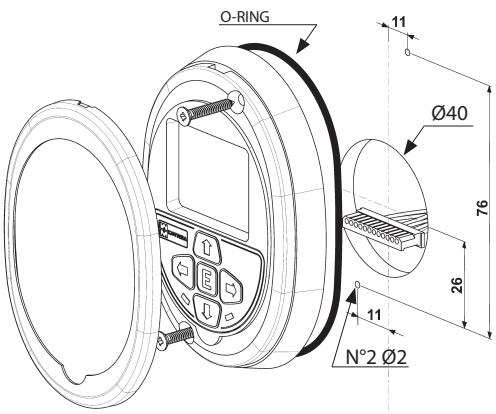

DISPLAY VERSION (ART. 99.688)

Cable 99.698

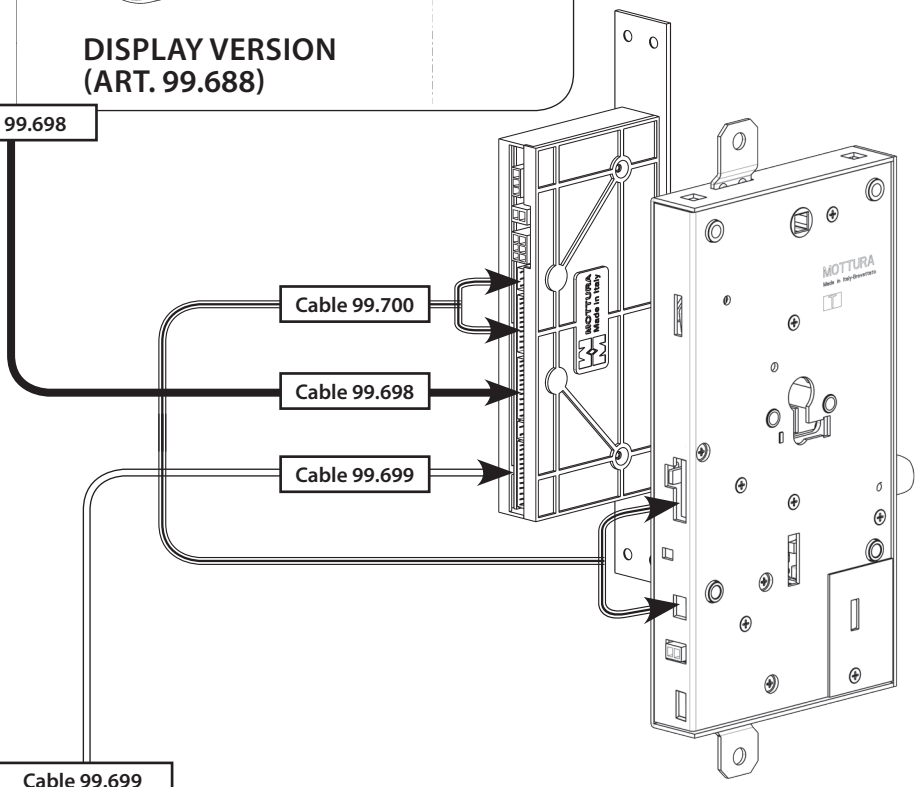

Protect the cables against tampering.

Cable 99.699

OUTSIDE DOOR

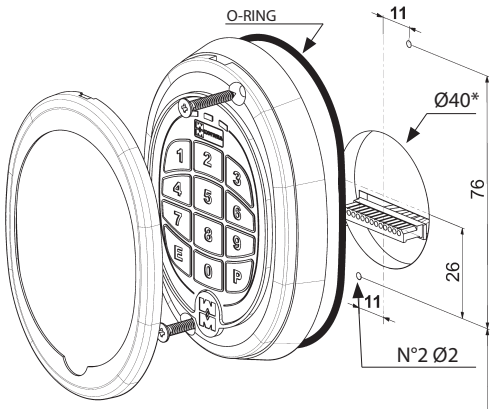

KEYBOARD + TRANSPONDER VERSION (ART. 99.686)

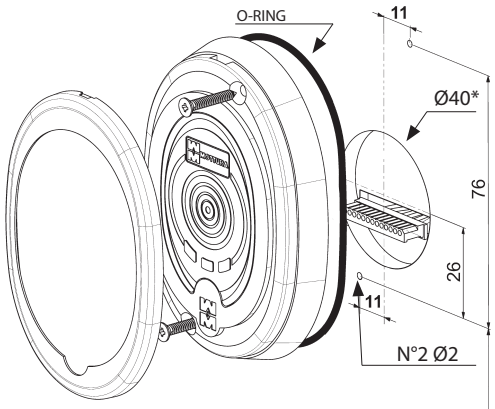

TRANSPONDER VERSION (ART. 99.687)

** 40 mm diameter hole to be drilled only on the external panel. Cut a 36x20 mm opening on the plate if the external panel has thickness less than/equal to 6 mm; otherwise, cut a 32x8 mm slot.*

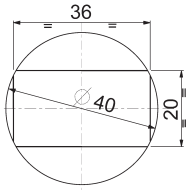

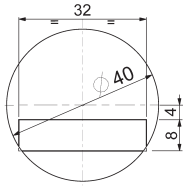

The internal and external escutcheons are interchangeable. You can replace keyboard version (Art.99685) with display version (Art. 99688) and the transponder-only escutcheon (Art. 99687) with the keyboard/transponder escutcheon (Art. 99686) at any time. Always switch off the power supply before making any replacement. Remember that all of the codes and transponder keys are memorized in the lock card.

4 - CONNECTING REMOTE CONTROL DEVICES

4.1 - EXTERNAL PERIPHERAL VOLTAGE-FREE CONTACT – INTERNAL BOARD VERSION

You can operate the lock with a "Normally Open" button or with a device fit with a "Normally Open" voltage-free contact (not supplied) to be connected to the lock by means of cable 99.701 (not supplied). Closing this contact for an interval from 0.5 to 2.0 seconds is equivalent to using button "E" on the internal escutcheon.

If the remote opening button/device is located more than 4 meters away from the lock, install a relay (not supplied) between the door and the device, with the coil connected to the remote control and the "Common" and "Normally Open" contacts of the relay connected to the lock with cable 99.701. The cable has to run through a grommet (Art. 99.144 – available on request).

Connect cable 99.701 as shown on the following diagrams.

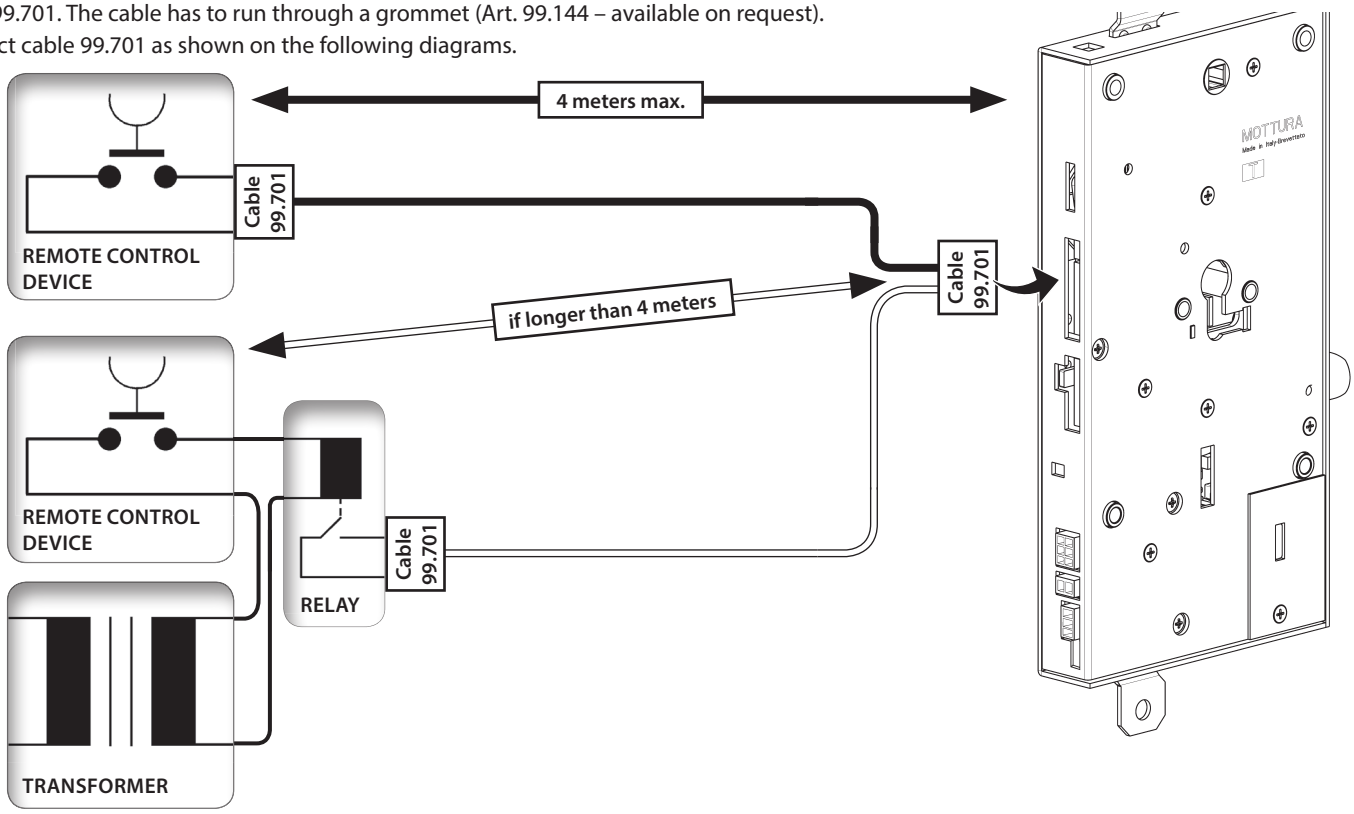

4.2 - EXTERNAL PERIPHERAL VOLTAGE-FREE CONTACT – EXTERNAL BOARD VERSION

Connections for version with board external to the lock.

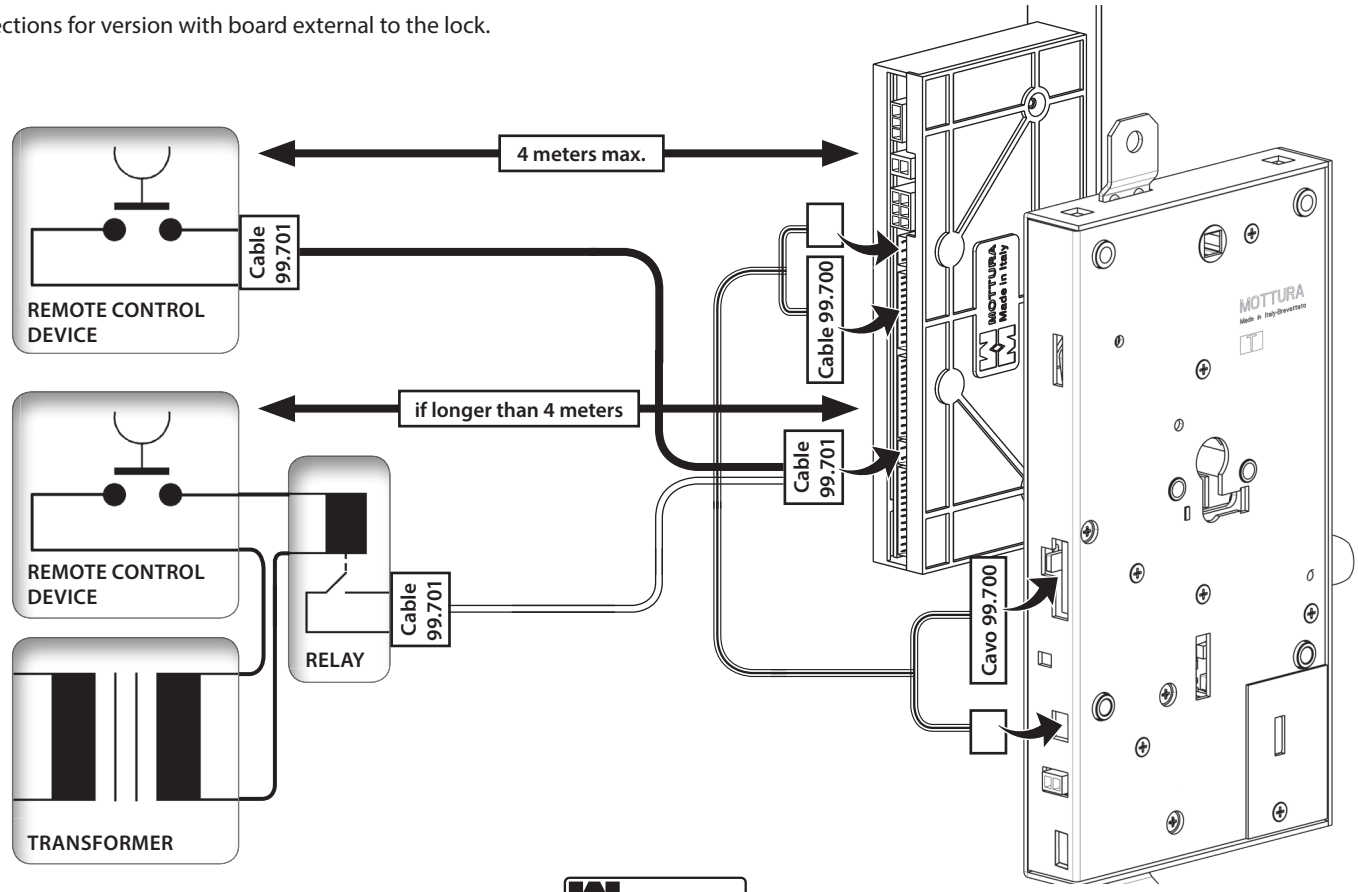

4.3 - EXTERNAL PERIPHERAL MOTTURA REMOTE CONTROL (99.684) INTERNAL BOARD VERSION

You can remotely operate and control the lock with the "REMOTE CONTROL" device (code 99.684 – available on request), to be connected to the lock by means of cable 99.702 (not supplied). Thanks to this device (which transmits an encrypted signal to the lock), any attempt to short-circuit the connection cable will have no effect.
The cable has to run through a grommet (Art. 99.144 – available on request) and is connected to the lock with the 6-pin connector. See the installation manual supplied with the remote control for information on its connection and use.

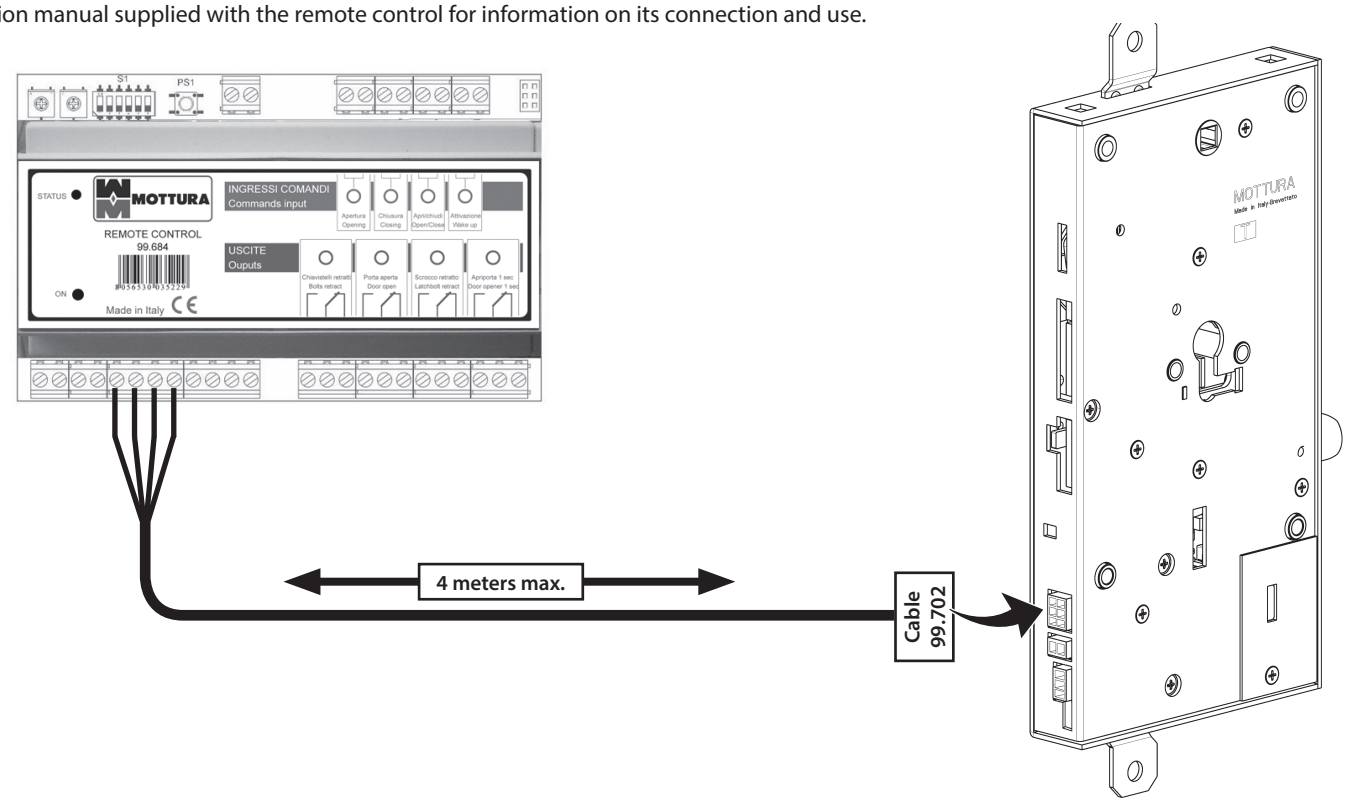

4.4 - EXTERNAL PERIPHERAL MOTTURA REMOTE CONTROL (99.684) EXTERNAL BOARD VERSION

Connections for version with board external to the lock.

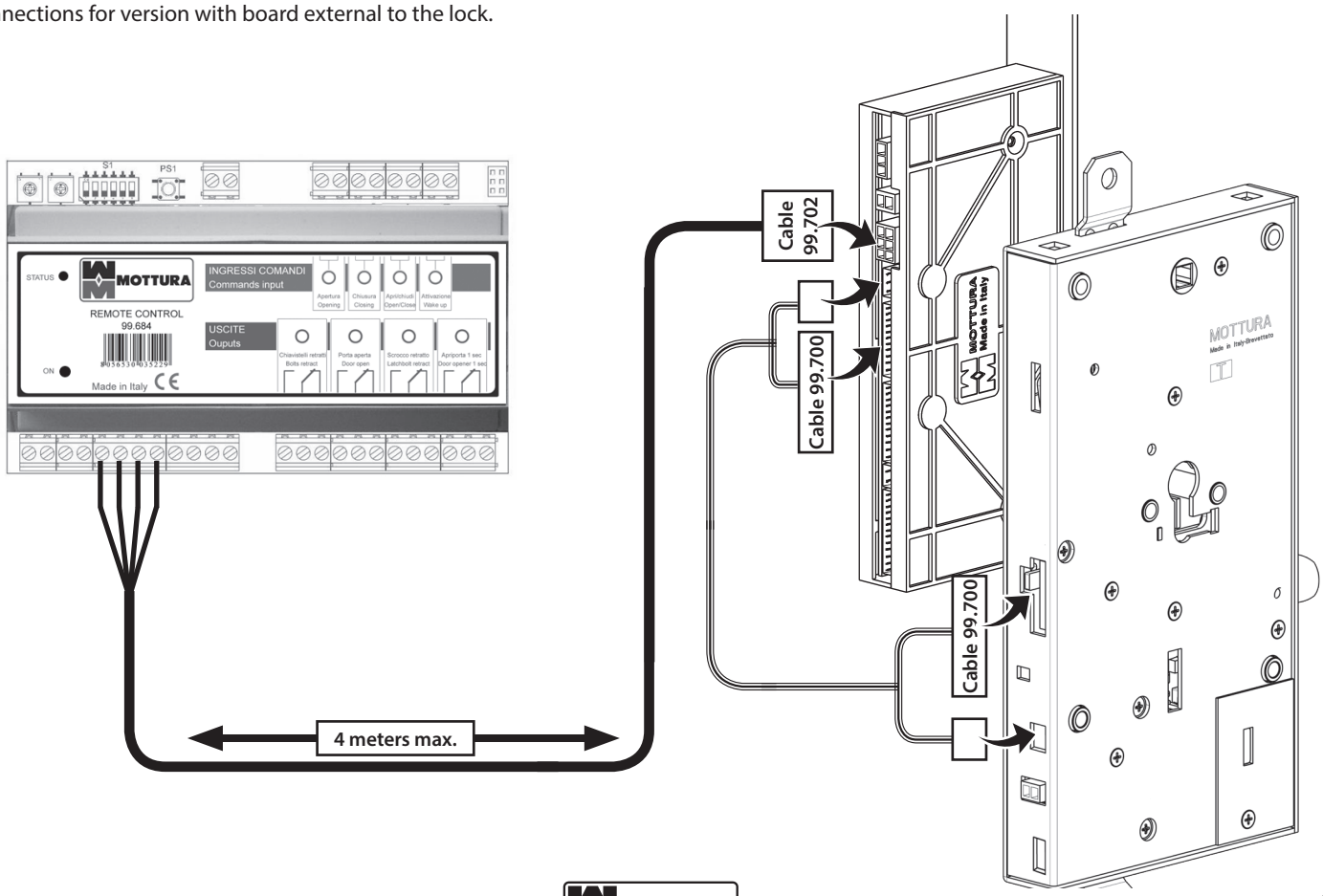

5 - CONNECTING THE POWER SUPPLY

The XMODE lock offers a number of options based on the type of power supply and electronic board chosen for the system.

TYPE OF ELECTRONIC BOARD:	POWER SUPPLY SYSTEM (with dedicated optional accessories):
- Internal (board inside lock) - External (board is in a black plastic box outside the lock)	- Non-rechargeable alkaline batteries - Mains - Non-rechargeable alkaline batteries + mains - Rechargeable batteries + mains

Before switching on the power supply and/or putting the batteries in their housings, make all of the connections and check that all wirings are correct. The AC/DC Adaptor (Art. 99.683) must be placed as close as possible to the door because it is always preferable to keep the 230 VAC main power cables long rather than the 12 VDC lock power cables in order to minimize voltage drop on the cable.
If you have to lengthen the lock power cables, never exceed 15 meters with a section of at least 1.5 mm2 (AWG15).

WARNING! The electric cable is not provided, *it must have a larger cross-section of 0.5 mm2 (AWG19) and maximum lengths 4 meters, otherwise for upper cable section for lengths over meters. We recommend to use coloured cables RED (positive) and BLACK (negative) to distinguish the polarity.*

The following table shows the possible power supply combinations, specifies the wiring diagram to be used for each, and lists the codes for wirings and the components used.

XMODE F1.0 WIRINGS

		INTERNAL ELECTRONIC BOARD						*EXTERNAL ELECTRONIC BOARD*					
	POWER SUPPLY	ALKALINE BATTERIES	MAINS	ALKALINE BATTERIES + *MAINS by ELECTRIC STRIKER*	ALKALINE BATTERIES + *MAINS by GROMMET*	RECHARGEABLE BATTERIES + *MAINS by ELECTRIC STRIKER*	RECHARGEABLE BATTERIES + *MAINS by GROMMET*	ALKALINE BATTERIES	MAINS	ALKALINE BATTERIES + *MAINS by ELECTRIC STRIKER*	ALKALINE BATTERIES + *MAINS by GROMMET*	RECHARGEABLE BATTERIES + *MAINS by ELECTRIC STRIKER*	RECHARGEABLE BATTERIES + *MAINS by GROMMET*
WIRING	*BATTERY PACK*	*Fig. A*		*Fig. E*		*Fig. G*		*Fig. B*		*Fig. F*		*Fig. H*	
	MAINS		*Fig. C*	*Fig. E*		*Fig. G*			*Fig. D*	*Fig. F*		*Fig. H*	
	BATTERY CHARGER					*Fig. G*						*Fig. H*	
	EXTERNAL BOARD							*Fig. B*	*Fig. D*	*Fig. F*		*Fig. H*	
	BYPASS STRIKER									*Fig. F*	--	*Fig. H*	--
COMPONENT	*BATTERY CHARGER*					*Fig. G*						*Fig. H*	
	AC/DC ADAPTER		*Fig. C*	*Fig. E*		*Fig. G*			*Fig. D*	*Fig. F*		*Fig. H*	
	STATE OF JUMPER	*INDIFFERENT*	*OPEN*	*CLOSE*	*OPEN*	*CLOSE*	*OPEN*						

NOTE : If you use the battery charger (art. 99 711), please note that the cables have been designed to be mounted inside the door. Refer to the installation instructions provided with the article.

STATE OF JUMPER

Set the jumper according to the way in which it supplies power to mains and independently of the use of batteries. Lock supplied with CLOSED jumper, if the power supply is taken from the striker plate or if the lock is operated only by batteries, then nothing has to be done.
If on the contrary, lock is operated directly by mains power (by 99.697 cable), it is mandatory to OPEN the jumper.
The jumper is located in the back of the lock below the connector of the battery protected by an adhesive label, and its state is described in detail in the wiring table.
To OPEN the jumper, disconnect all power supplies and batteries, be careful not to cause a short circuit between the outer casing of the lock and the electronic board.
Remove the protection and pull out the jumper using the tweezers.

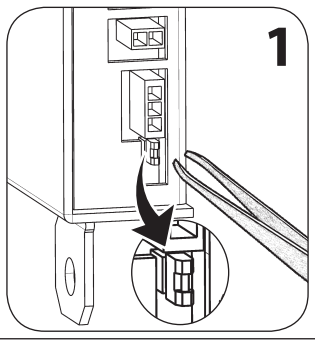

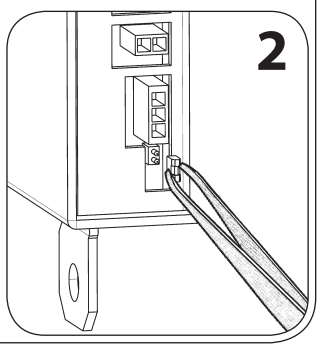

WARNING!

DO NOT CONNECT THE TWO CONTACTS OF THE STRIKER

The connection CAN ***IRREVERSIBLY*** *damage the device compromising the operation lock.*

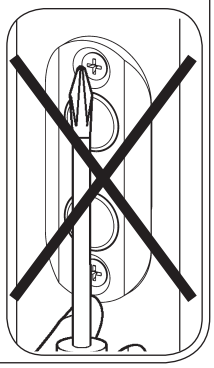

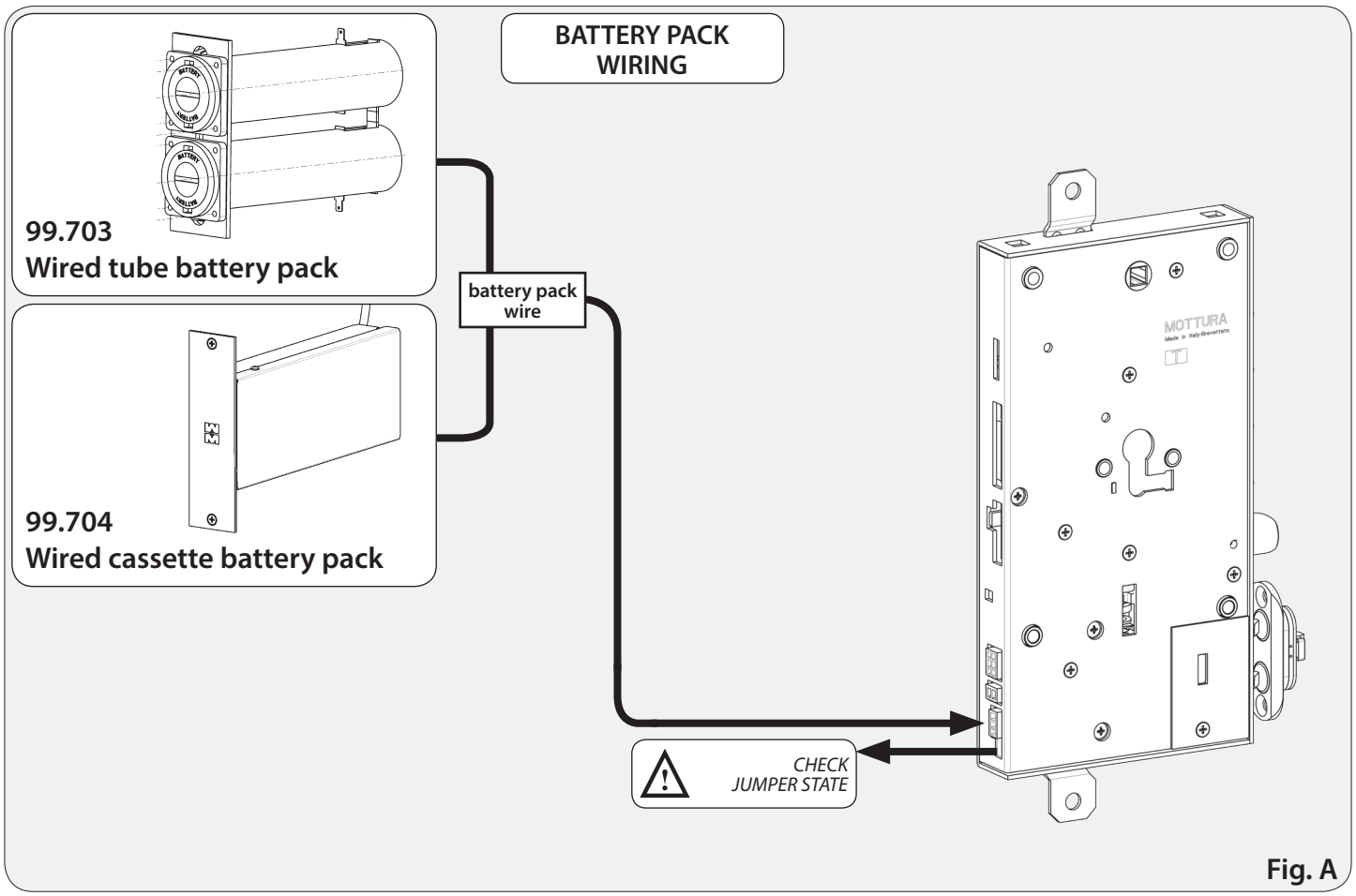
BATTERY PACK
WIRING
99.703
Wired tube battery pack
99.704
Wired cassette battery pack
battery pack
wire
CHECK
JUMPER STATE
MOTTURA

Fig. A

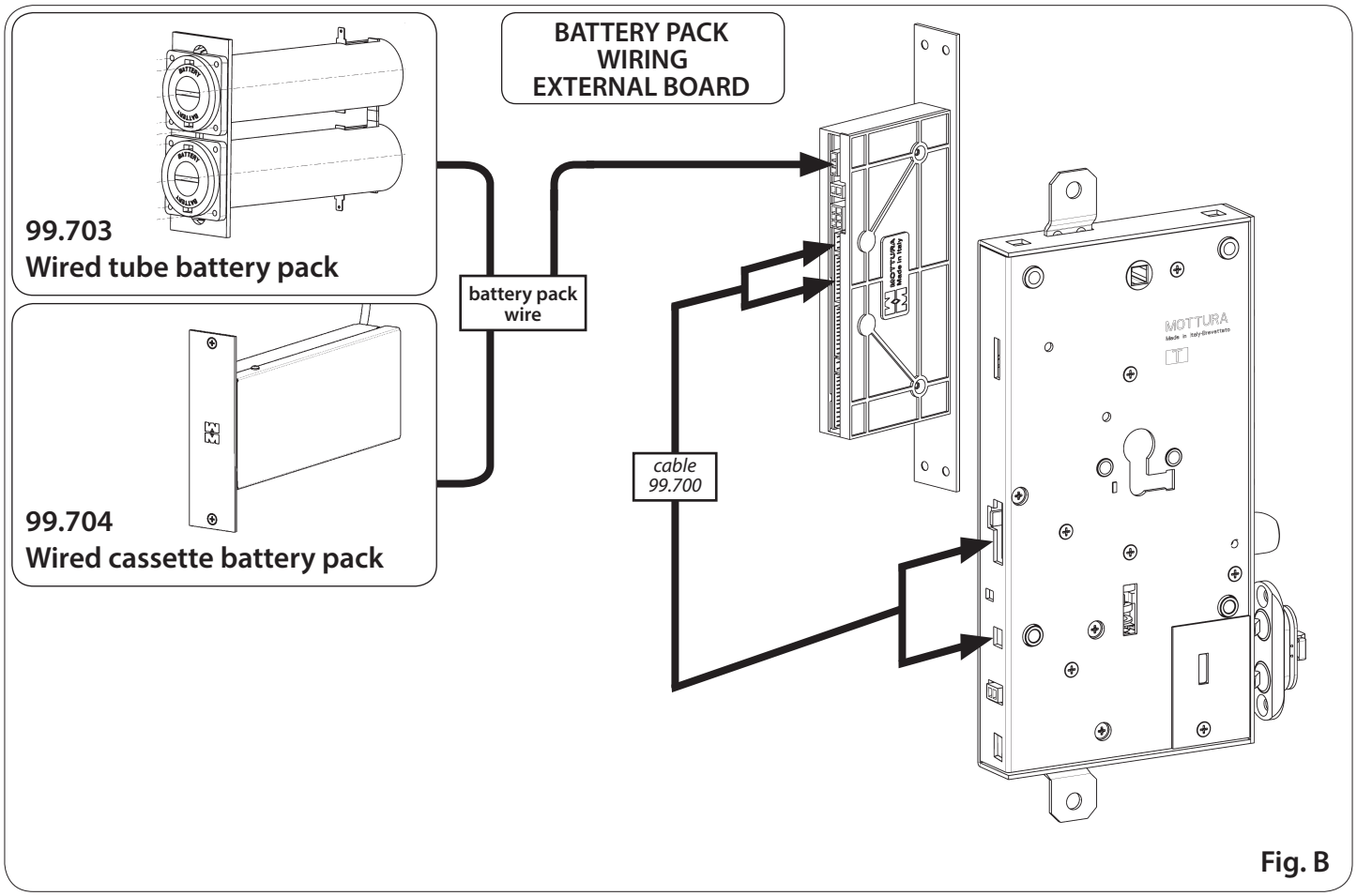
BATTERY PACK
WIRING
EXTERNAL BOARD
99.703
Wired tube battery pack
99.704
Wired cassette battery pack
battery pack
wire
cable
99.700
MOTTURA

Fig. B

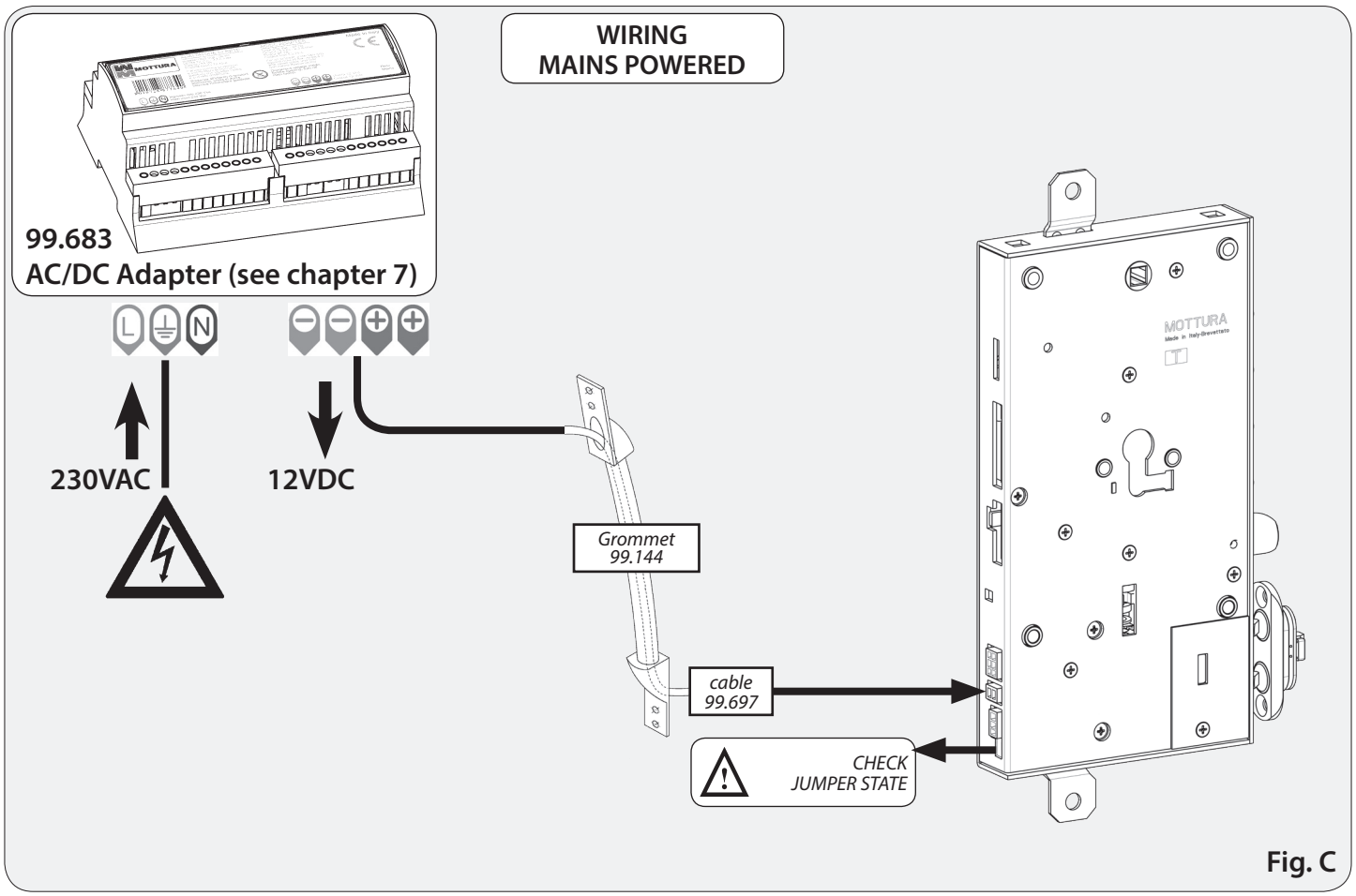
WIRING
MAINS POWERED
99.683
AC/DC Adapter (see chapter 7)
L
N
230VAC
12VDC
Grommet
99.144
cable
99.697
CHECK
JUMPER STATE
MOTTURA

Fig. C

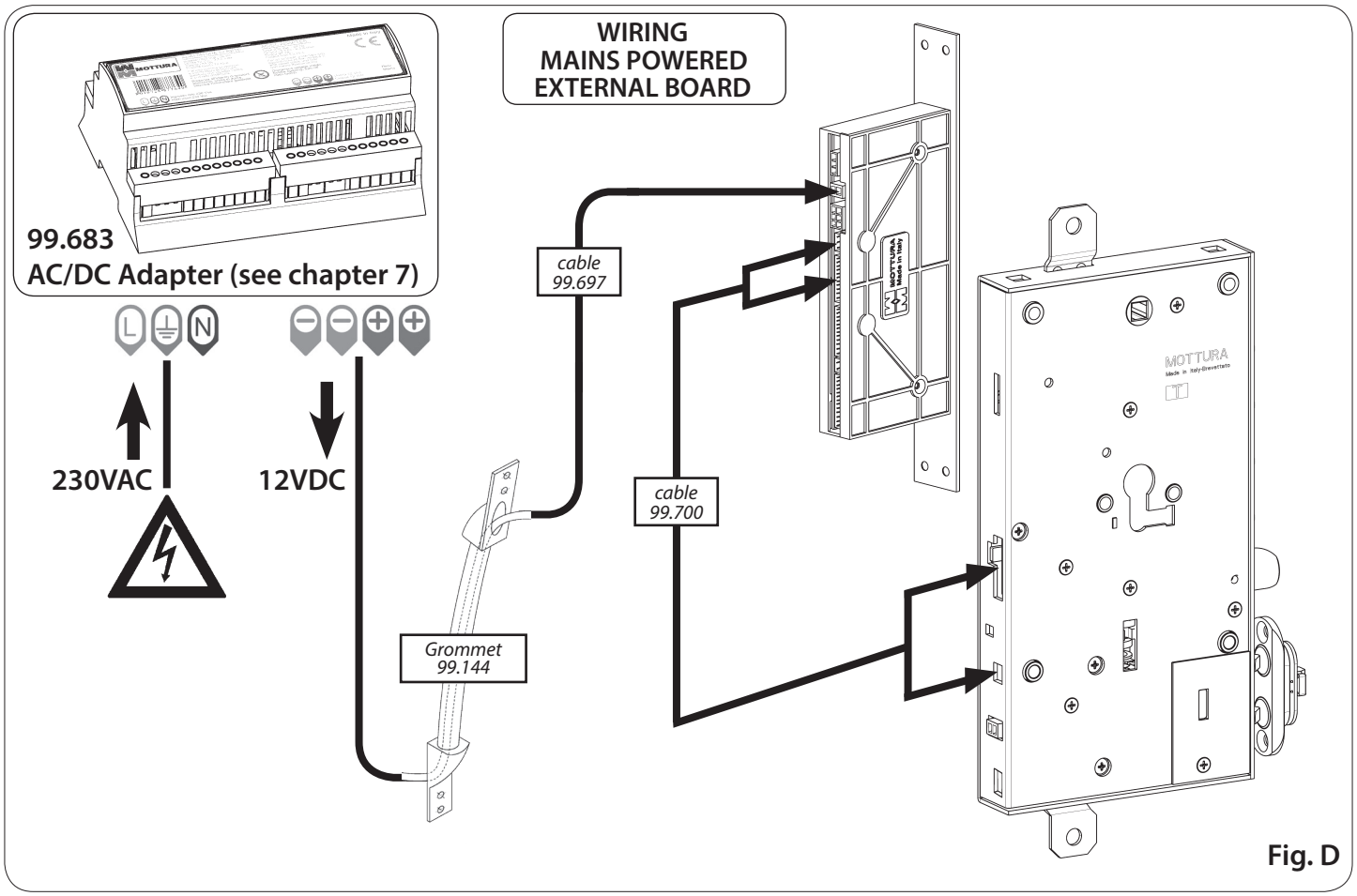
WIRING
MAINS POWERED
EXTERNAL BOARD
99.683
AC/DC Adapter (see chapter 7)
L
N
230VAC
12VDC
cable
99.697
cable
99.700
Grommet
99.144
MOTTURA

Fig. D

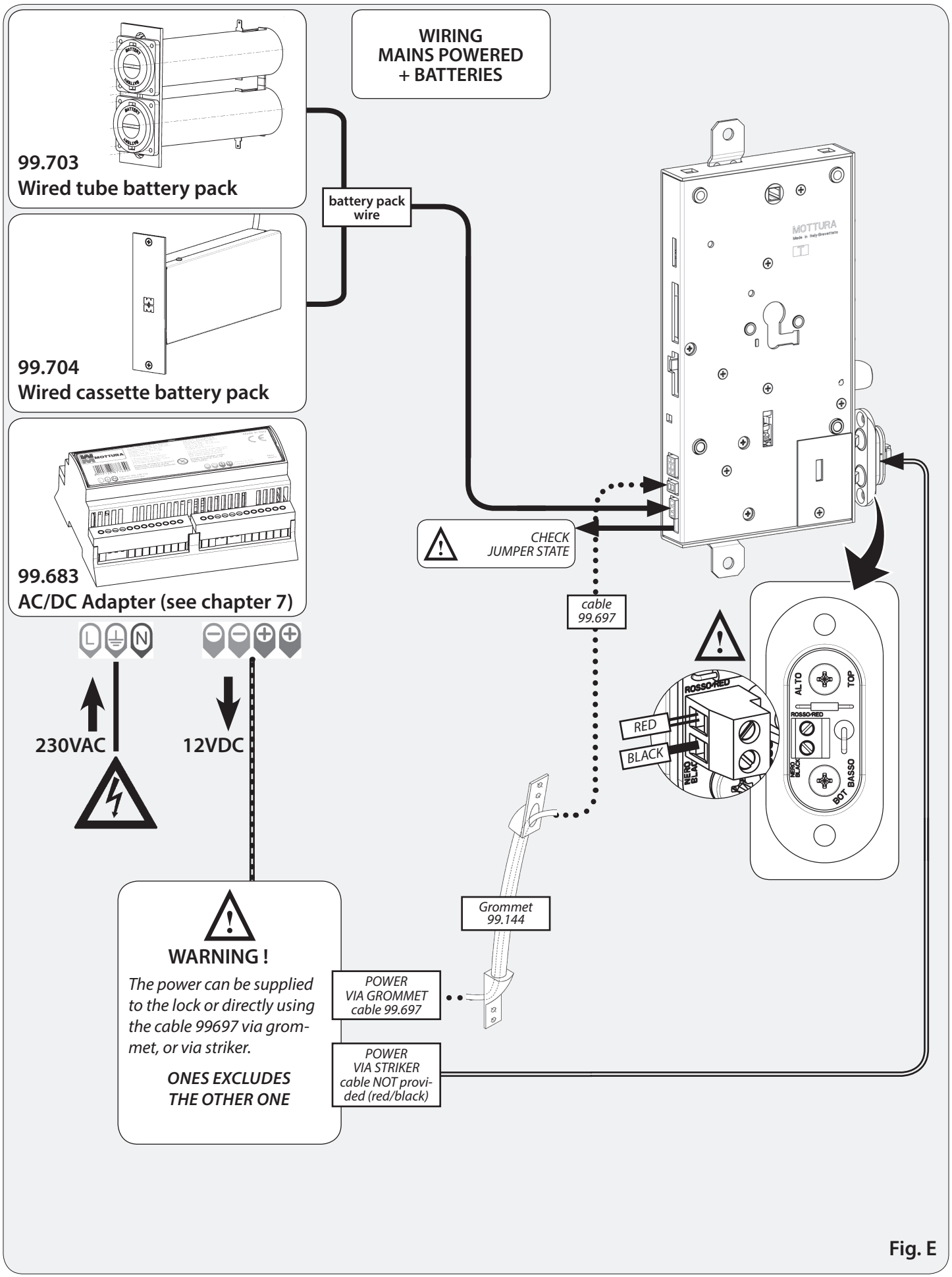
WIRING
MAINS POWERED
+ BATTERIES
99.703
Wired tube battery pack
battery pack wire
99.704
Wired cassette battery pack
99.683
AC/DC Adapter (see chapter 7)
CHECK
JUMPER STATE
cable
99.697
230VAC
12VDC
ROSSO-RED
RED
BLACK
NERO BLACK
ALTO
TOP
BOT
BASSO
Grommet
99.144
WARNING !
The power can be supplied to the lock or directly using the cable 99697 via grommet, or via striker.
ONES EXCLUDES THE OTHER ONE
POWER
VIA GROMMET
cable 99.697
POWER
VIA STRIKER
cable NOT provided (red/black)

Fig. E

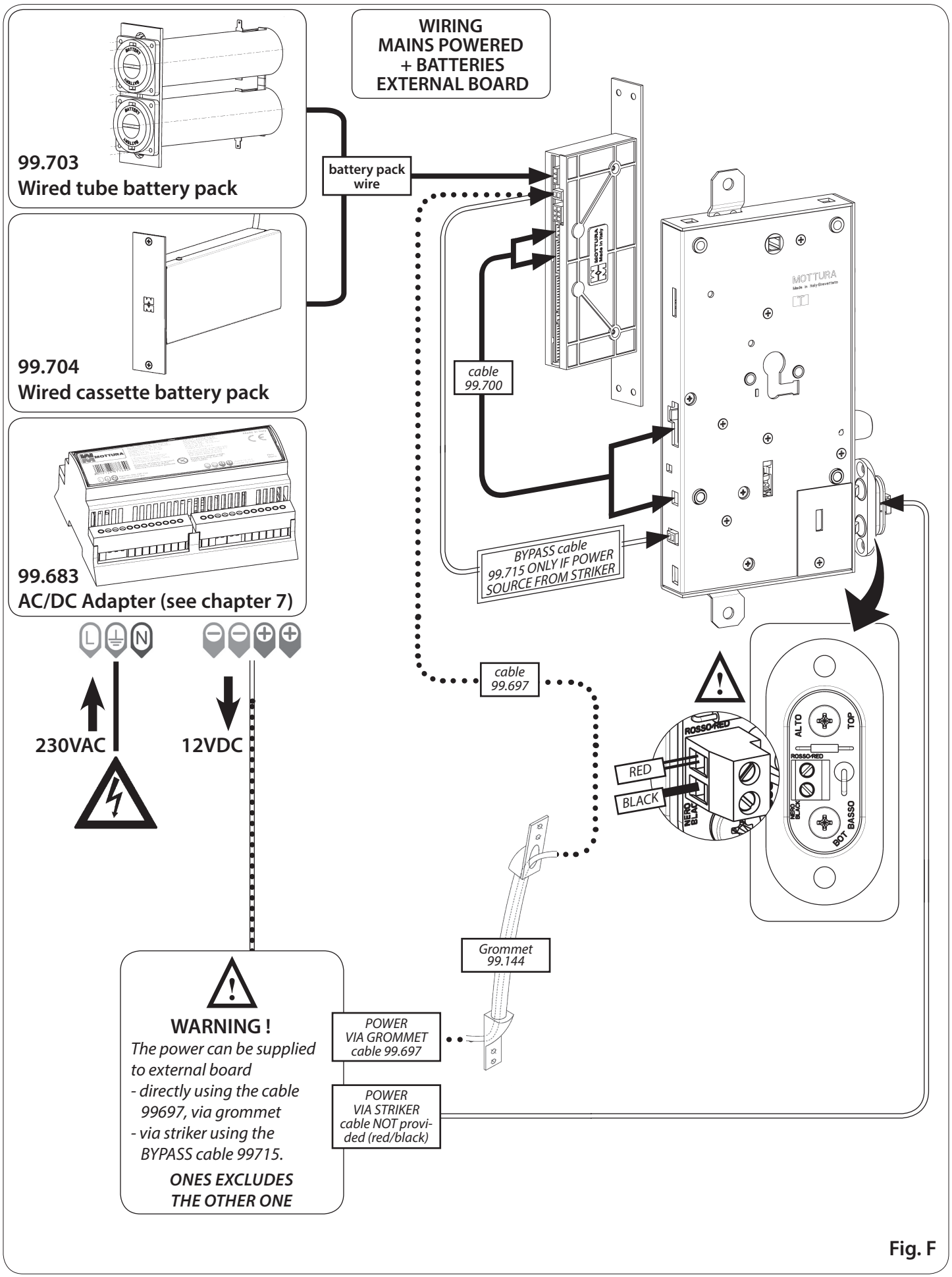
WIRING
MAINS POWERED
+ BATTERIES
EXTERNAL BOARD
99.703
Wired tube battery pack
battery pack wire
99.704
Wired cassette battery pack
cable 99.700
99.683
AC/DC Adapter (see chapter 7)
BYPASS cable 99.715 ONLY IF POWER SOURCE FROM STRIKER
L
N
230VAC
12VDC
cable 99.697
RED
BLACK
ROSSO-RED
NERO BLACK
ALTO
TOP
BASSO
BOT
Grommet 99.144
WARNING !
The power can be supplied to external board
- directly using the cable 99697, via grommet
- via striker using the BYPASS cable 99715.
ONES EXCLUDES THE OTHER ONE
POWER VIA GROMMET cable 99.697
POWER VIA STRIKER cable NOT provided (red/black)

Fig. F

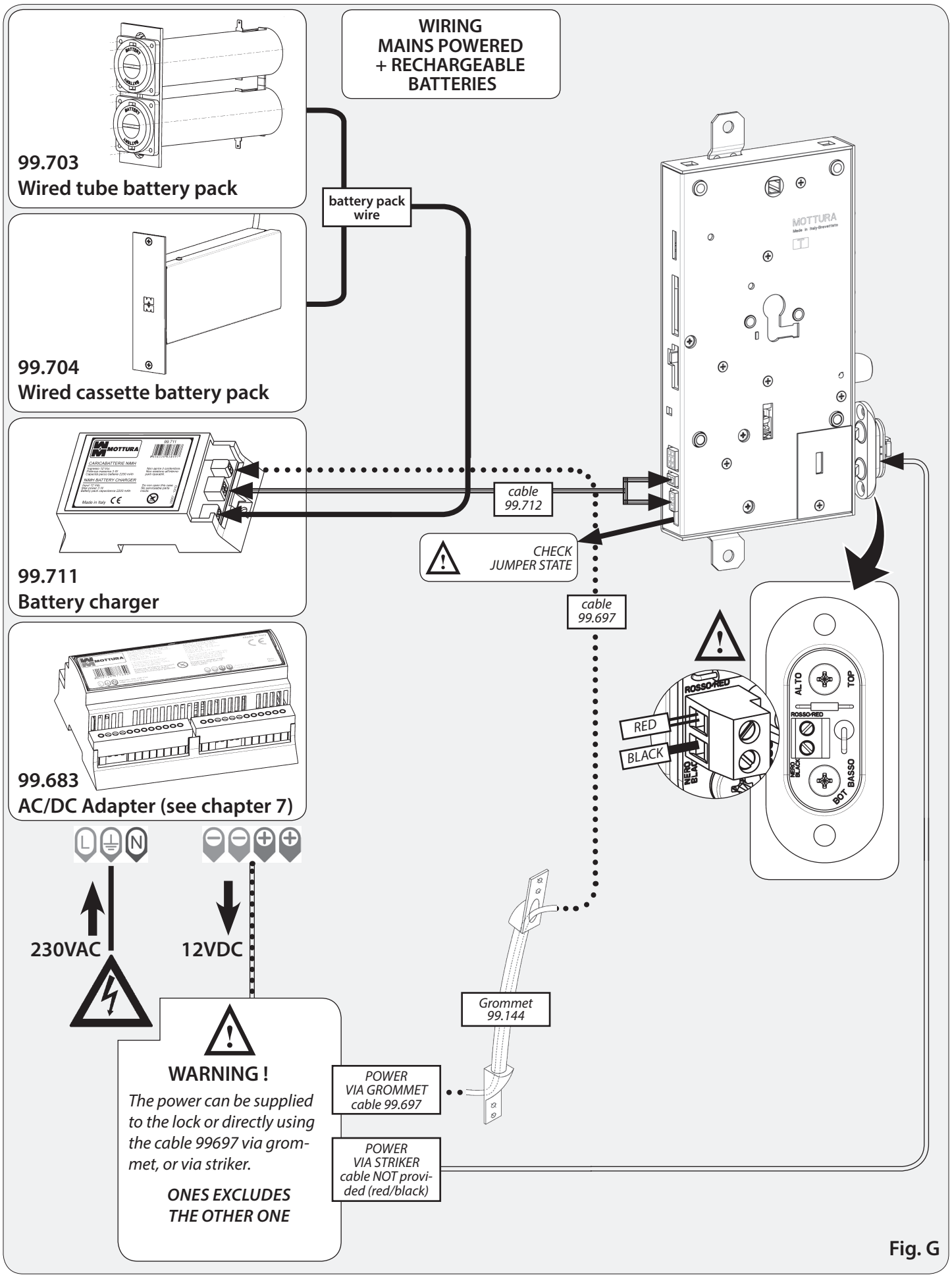
WIRING
MAINS POWERED
+ RECHARGEABLE
BATTERIES
99.703
Wired tube battery pack
battery pack wire
99.704
Wired cassette battery pack
99.711
Battery charger
cable 99.712
CHECK JUMPER STATE
cable 99.697
99.683
AC/DC Adapter (see chapter 7)
ROSSO-RED
RED
BLACK
NERO BLACK
ALTO
TOP
BOT
BASSO
L
N
230VAC
12VDC
Grommet 99.144
WARNING !
The power can be supplied to the lock or directly using the cable 99697 via grommet, or via striker.
ONES EXCLUDES THE OTHER ONE
POWER VIA GROMMET cable 99.697
POWER VIA STRIKER cable NOT provided (red/black)

Fig. G

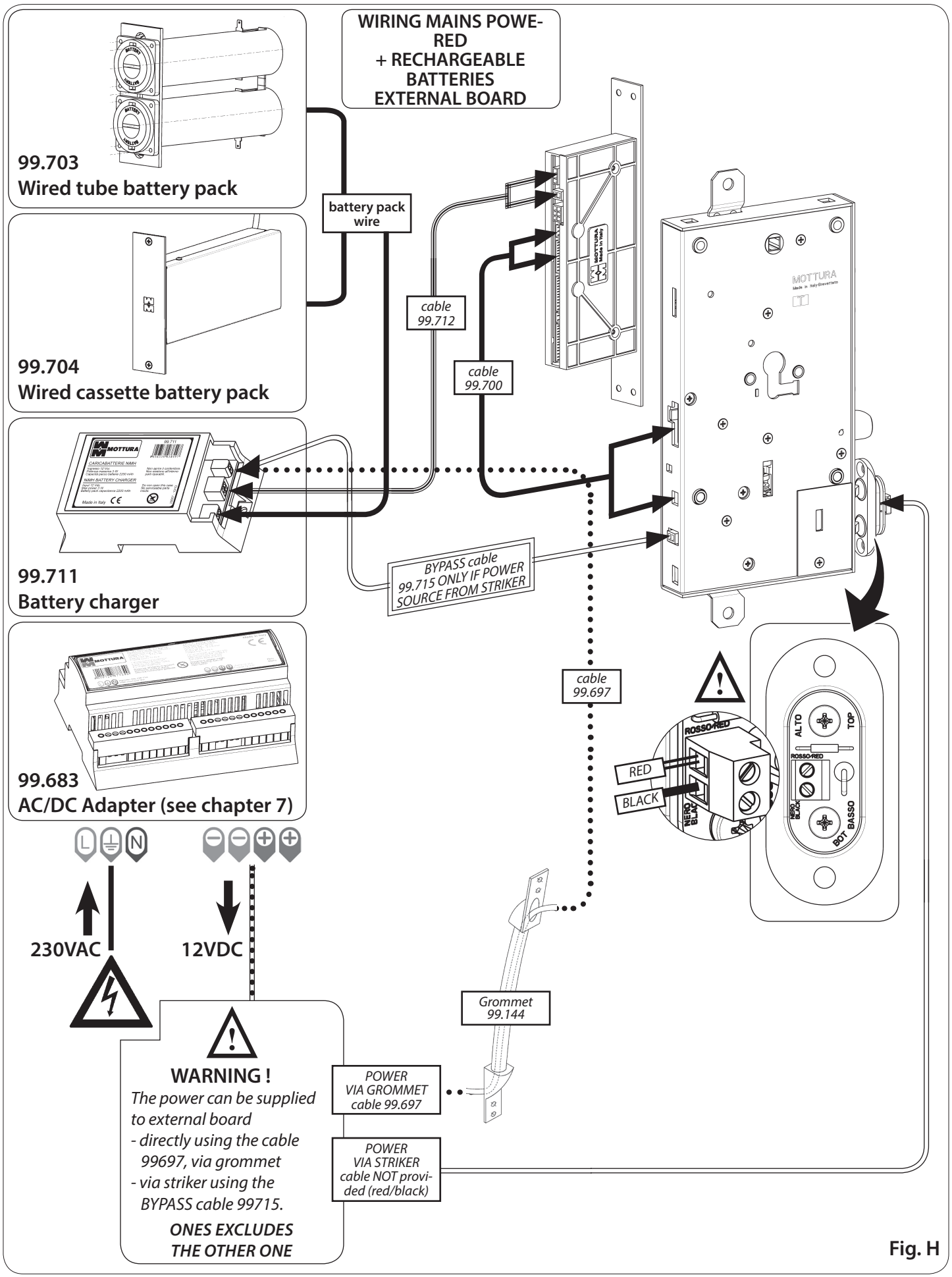
WIRING MAINS POWE-
RED
+ RECHARGEABLE
BATTERIES
EXTERNAL BOARD
99.703
Wired tube battery pack
battery pack
wire
99.704
Wired cassette battery pack
cable
99.712
cable
99.700
99.711
Battery charger
BYPASS cable
99.715 ONLY IF POWER
SOURCE FROM STRIKER
99.683
AC/DC Adapter (see chapter 7)
cable
99.697
ROSSO-RED
RED
BLACK
NERO
BLACK
ALTO
TOP
BASSO
BOT
L
N
230VAC
12VDC
Grommet
99.144
WARNING !
The power can be supplied
to external board
- directly using the cable
99697, via grommet
- via striker using the
BYPASS cable 99715.
ONES EXCLUDES
THE OTHER ONE
POWER
VIA GROMMET
cable 99.697
POWER
VIA STRIKER
cable NOT provi-
ded (red/black)

Fig. H

6 - ELECTRICAL WIRING

6.1 - ELECTRIC WIRING - INTERNAL BOARD VERSION

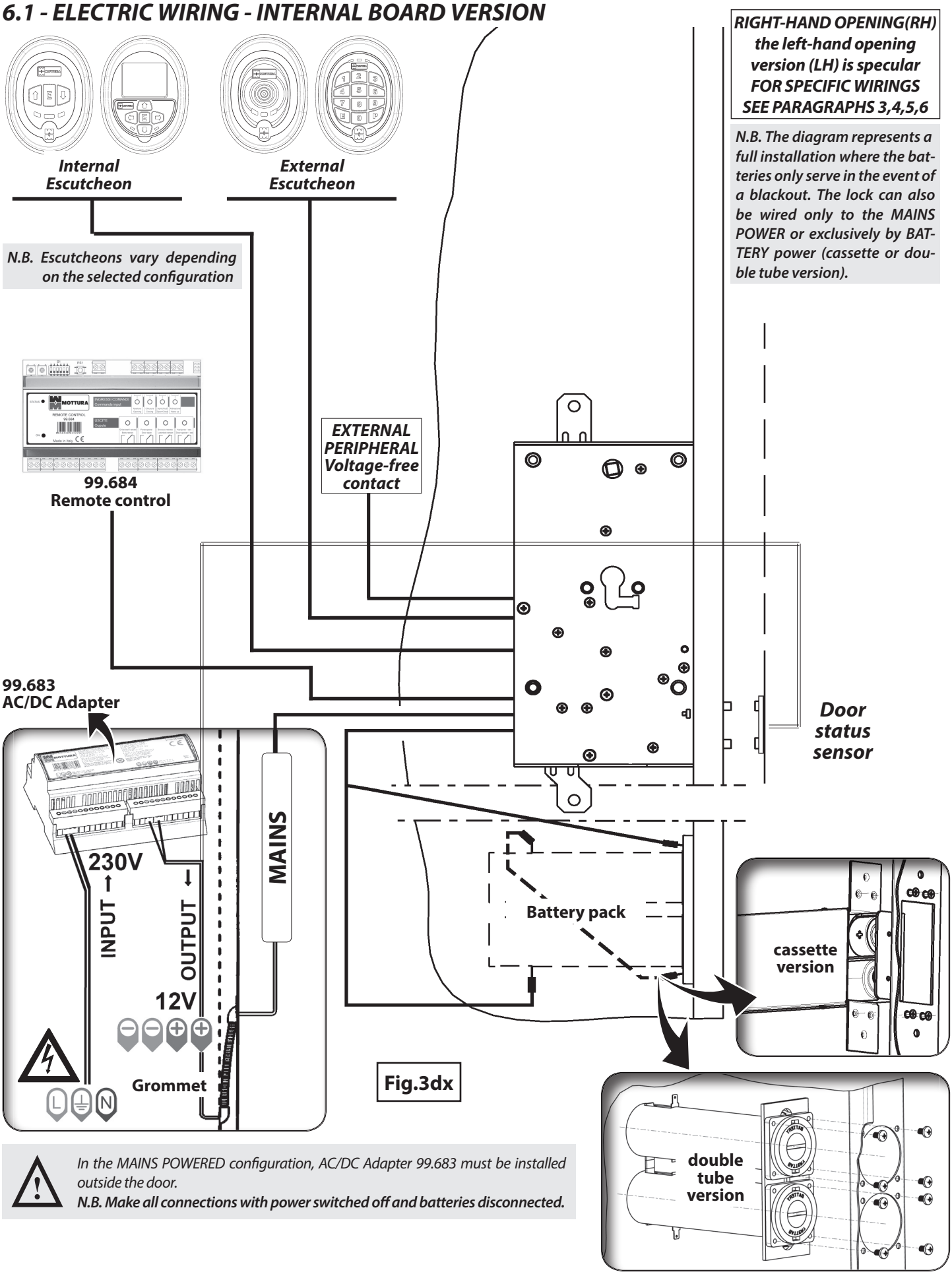

Fig.3dx

In the MAINS POWERED configuration, AC/DC Adapter 99.683 must be installed outside the door.
N.B. Make all connections with power switched off and batteries disconnected.

6.2 - ELECTRIC WIRING - EXTERNAL BOARD VERSION

LEFT-HAND OPENING (LH) the right-hand opening version (RH) is specular FOR SPECIFIC WIRINGS SEE PARAGRAPHS 3,4,5,6

N.B. The diagram represents a full installation where the batteries only serve in the event of a blackout. The lock can also be wired only to the MAINS POWER or exclusively by BATTERY power (cassette or double tube version).

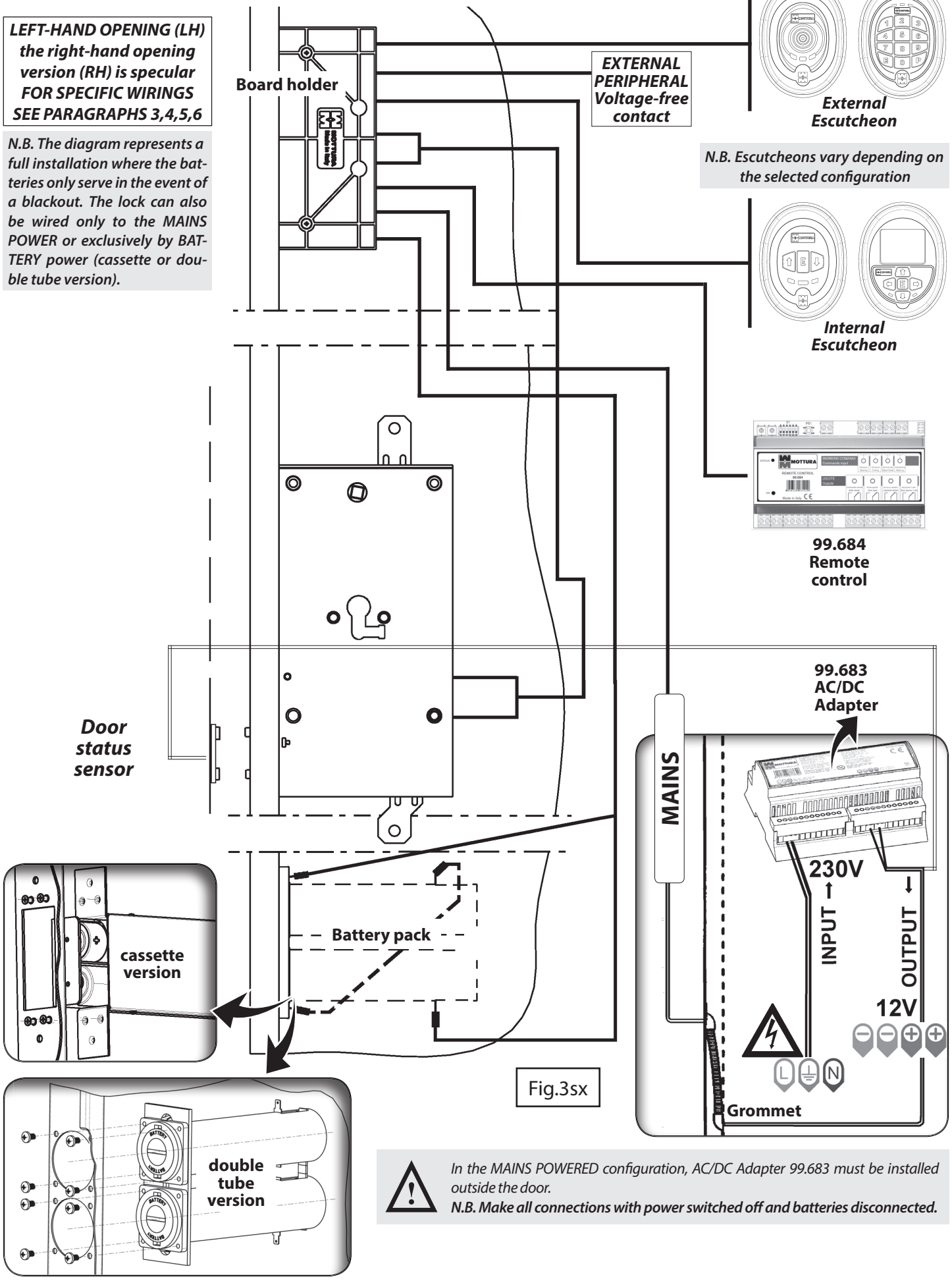

Fig.3sx

In the MAINS POWERED configuration, AC/DC Adapter 99.683 must be installed outside the door.
N.B. Make all connections with power switched off and batteries disconnected.

7 - AC/DC ADAPTER CONNECTION (99.683)

7.1 - MECHANICAL FIXING

The AC/DC adapter transforms the 230VAC 50/60Hz home power supply into a 12 VDC isolated non-stabilized supply to power the lock.
It can be fixed to the wall: the 2 slots on the bottom of the box allow it to be hooked to screws fixed to the wall (follow the drilling instructions on the bottom). As an alternative, the box can be hooked to a DIN guide (EN 60715) (not supplied) and snapped into place (black hook facing downward). To release it, pull the black hook downward with a flat-blade screwdriver.

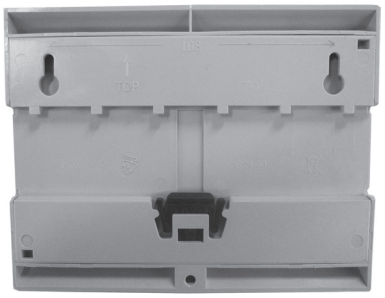

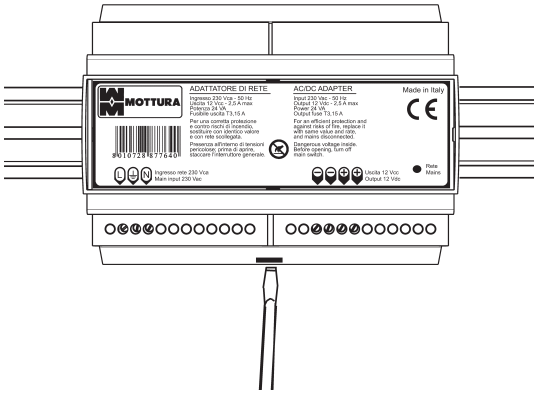

7.2 - ELECTRICAL CONNECTION

All connections must be made by trained technical personnel in conformity to electrical safety standards and according to rules of Good Practice.

INPUT: Connect the 230VAC 50/60Hz home power supply to input terminals L and N, inserting a cut-out and two-way switch up-line. Connect the ground of the power supply to the input terminal with the ground symbol.
OUTPUT: Connect the lock power supply cable (code 99.697) to the 12 VDC output terminals, taking care to respect polarity (red to positive (+), black to negative (-)) to prevent permanent damage to the system.
Double output terminals are provided ONLY to power any other Mottura devices. Using these terminals for any other purpose may permanently damage the system.

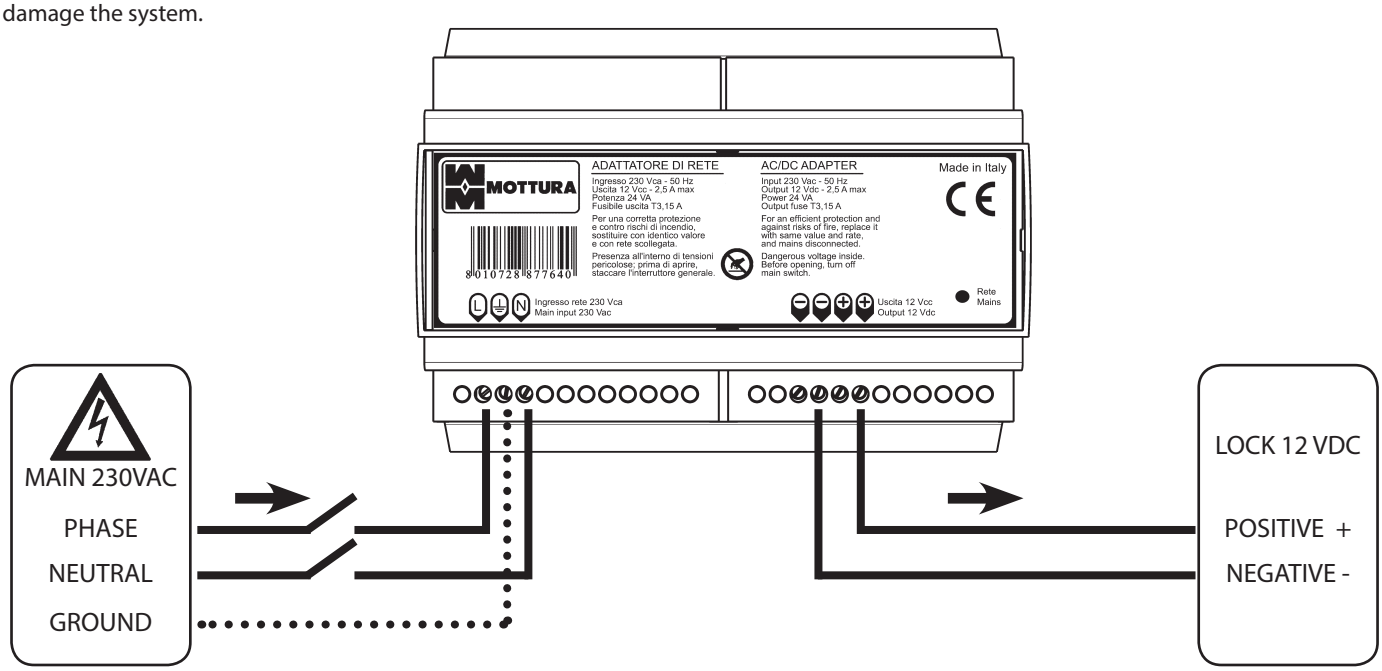

REPLACING THE OUTPUT FUSE: The transformer is protected in output by a fuse. An integral fuse is indicated by the "MAINS/RETE" LED on the front panel; if the LED is off with power switched on, the fuse is blown.

Before replacing the fuse, switch off the 230 VAC mains power supply and take all possible precautions to avoid electrical shock.

Remove the terminal cover from the 12 VDC OUTPUT side by inserting a small flat-blade screwdriver a few millimeters into the center housing on the cover, then gently tilt it from the other side of the box until the fastening tab is released. Remove the screwdriver and gently slide off the terminal cover with your hands.
Remove the plastic cover of the fuse holder, remove and replace the fuse with one with the same rating (see technical data, paragraph 7.3).
Reposition the terminal cover before switching voltage back on.

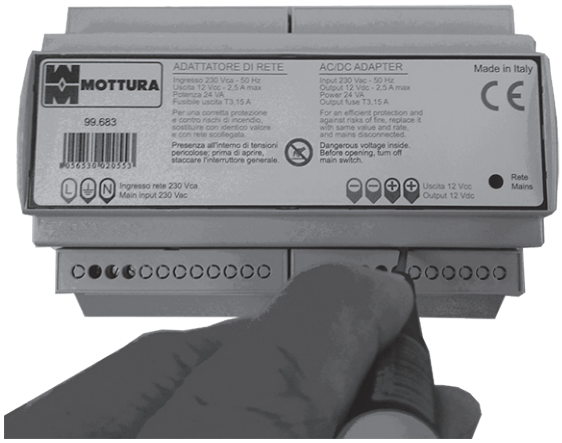

7.3 - TECHNICAL DATA

INPUT POWER SUPPLY	VOLTAGE / FREQUENCY	230 VAC / 50-60Hz
	MAX. CURRENT DRAW	< 0,105 A
	MAX. POWER	24 VA
	PROTECTION RATING	IP10 (with terminal covers on)
	WORK TEMPERATURE	Min -10 °C ÷ Max.+40 °C
	ENCAPSULATED TRANSFORMER PROTECTION	T 0.125 A
MECHANICAL	WEIGHT	0.7 Kg
	DIMENSIONS	142 x 110 x 62 mm
	MATERIAL	Blend PC/ABS self-extinguishing UL94-V0
OUTPUT	VOLTAGE	12 VDC non-stabilized
	IMPULSE ABSORPTION (5 sec. max)	2 A
	FUSE	DELAYED ACTION T 3.15 A (5 x 20) mm
TERMINAL BOARD	RATED SECTION OF CABLES	0.5mm^2 (AWG20) to 2 mm^2 (AWG12)

99293GB - a_013658 - 02/2016 REV.01