POWERED ELECTRONIC LOCK

INSTALLATION INSTRUCTIONS

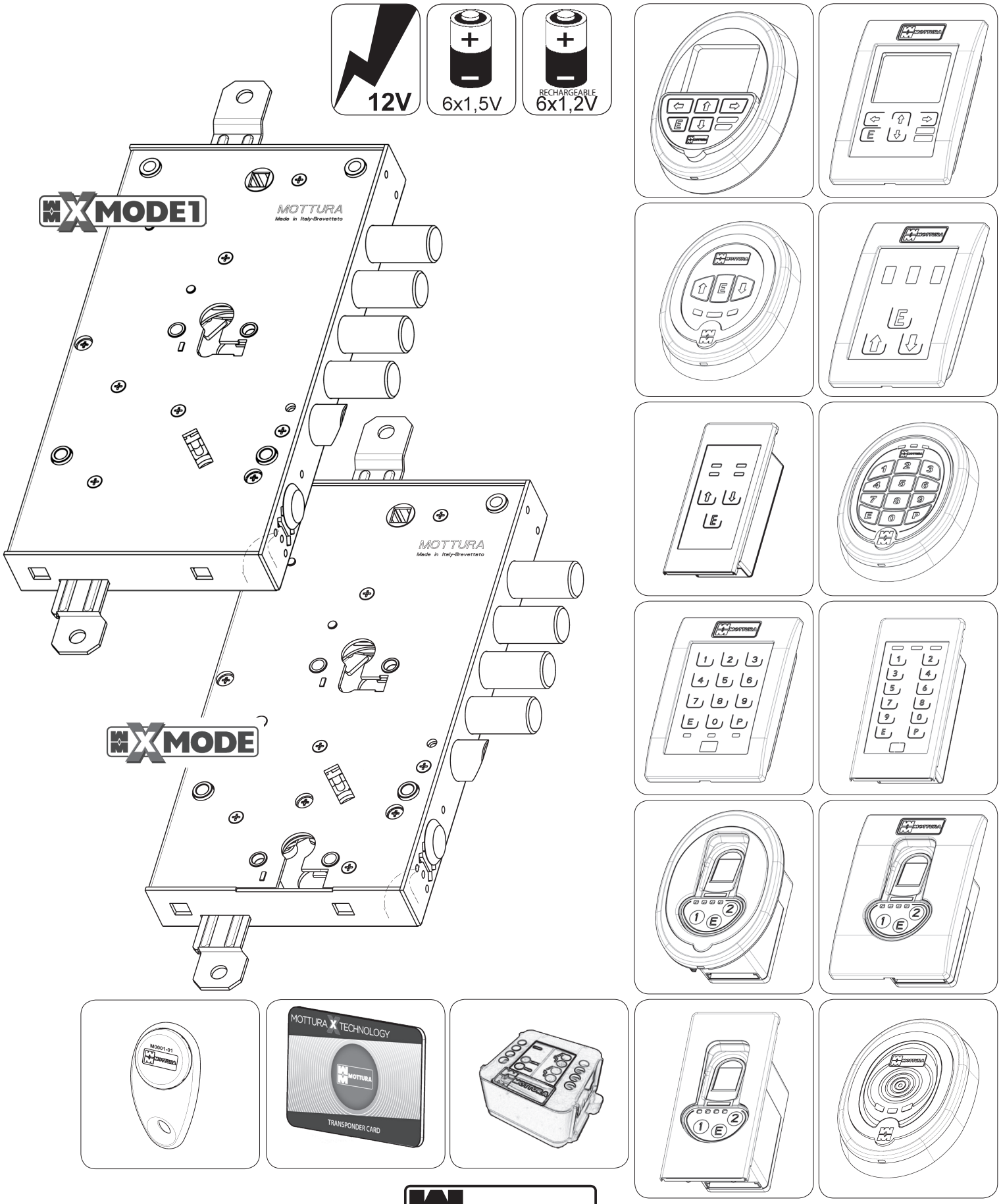

TABLE OF CONTENTS

EQUIPMENT

1X

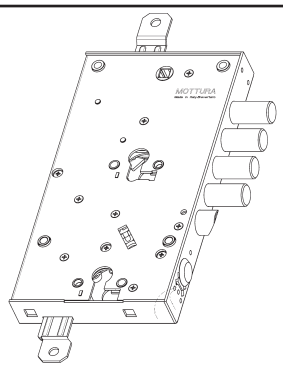

2X - 99066D/S

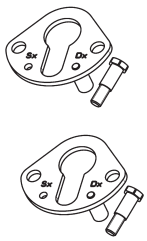

1X - 99698

1X - 99699

1 - GENERAL INSTRUCTIONS

Mottura Serrature di Sicurezza S.p.A. thanks you for choosing this product and reminds you :

- To read all of these instructions very carefully before installing the lock or doing any maintenance work on the product.
- That all assembly and connection procedures must be done in conformity to the rules of Good Practice and to current law. DO NOT install this product in rooms or atmospheres at risk of explosion or in the presence of flammable fumes/gases.
- Do not install the lock on doors with risk of contact with water or atmospheric agents if not properly protected.
- To switch off the power supply and disconnect all live parts before doing any installation or maintenance work on the product. Take all possible precautions to eliminate the risk of electrical shock when doing the installation or maintenance procedures described in this manual.
- The installer must deliver these instructions and all of the maintenance instructions to the user.
- Keep these instructions for future reference and attach the sales receipt to validate the warranty.
- In case of problems contact authorized dealers only.

This manual explains how to connect the lock according to a logical-functional sequence.
First connect all of the selected peripherals and then the power supply.

1. Connecting the escutcheons (allow lock to be controlled on door)
2. Connecting the remote control units (allow remote control of the lock)
3. Connecting the power supplies.

If you have to disconnect the wires, do the above steps in the reverse order, i.e., always disconnect the power supplies first.
Mottura Serrature di Sicurezza S.p.A. may change the characteristics of the products described in these instructions at any time and without notice.

1.1 - WARRANTY TERMS

This product has been inspected by Mottura Serrature di Sicurezza S.p.A. and is guaranteed to be free of all manufacturing defects for the time specified by current Italian law, starting on the date of purchase indicated on the sales receipt.
The warranty is in force if the sales receipt, showing details identifying the product, is exhibited to customer service personnel.
The warranty covers the replacement or repair of parts found defective at origin due to manufacturing defects. Costs of shipping to and from service centers will be paid by the customer.
In case of repeated malfunctions of the same type or unrepairable defects, Mottura Serrature di Sicurezza S.p.A. may, at its own discretion, replace the complete product. The warranty on the replaced product will continue until expiration of the original warranty.
If work is necessary at the customer's home, the customer will be required to pay a charge for the costs of transfer of authorized technical personnel.
Transport will be at the customer's risk if the product is sent by the customer and at the authorized technician's risk if the product is picked up and transported by the technician.

1.2 - LIMITS OF LIABILITY

The warranty does not cover damage due to:

- negligence, carelessness or use in any manner not described in these instructions
- lack of protection of the lock prior to carrying out any work operations on the door, such as drilling or welding (welds, panel holes, structure holes, etc.), which may generate waste materials that will hinder the correct operation of the lock upon entering its mechanism
- maintenance performed in any manner not described in these instructions or by unauthorized personnel
- use of non-original accessories/components Mottura
- transport without the necessary precautions

and from any circumstances that cannot be attributed to manufacturing defects.
Work temperature: -10°C to +55°C. The batteries guarantee correct operation of the lock in the specified temperature range. If such temperature extremes are approached or exceeded, battery performance may decrease rapidly, with possible malfunction of the electrical part.
In case of extremely low temperatures, it is advisable to power the lock from the mains by using the 230/12 V transformer.
In addition, Mottura Serrature di Sicurezza S.p.A. declines all liability for any damage to persons or property deriving from failure to observe all of the precautions described herein.

N.B. Mechanical lock operation is guaranteed even when the electronics of the lock has no anomaly. This excludes any electronic safety level. Mechanical keys should therefore only be used by the owner and/or by extremely trustworthy persons.

2 - INSTALLATION

Fix the lock to the door structure by using all of the fasteners: side attachments (A), bushings (B) or mortise-type (C) (Fig. 1-2). In order to work correctly, the lock should be fixed in a vertical position. The lock may not work properly if installed or used in a different position. For correct operation of the lock, the spring latch must be able to protrude freely without frictioning when the door is open or closed.
If necessary, drill spaces in the door structure to hold the battery pack and the box for the electronic board (supplied in the pack for the selected version) in a non-binding position defined only by the length of the wires and by internal dimensions due to door configuration (opening limiter, switchlocks, etc.). Drill the frame for the door status sensor. For these drillings, see the attached mounting diagram in Fig. 3. If you are mounting switchlocks, always provide sufficient clearance between the bar and the upper and lower tabs both when the lock is open and when it is closed, so as to prevent strain that could damage the motor. Fasten the battery pack, if required, and wire it as shown in paragraphs 3, 4, 5, 6 (diagrams Fig.3RH page 14), (depending on door version), preparing the connections for the board holder, lock and the internal and external escutcheons using the wires supplied as standard.

Protect the lock before doing any work on the door that could produce waste material (soldering, drilling of panels, drilling of structure, etc.) that might enter the lock and impair its functioning. Do not insert the batteries into the battery holder until finished fixing to avoid short circuits that may damage the system.
***WARNING!** When the door is completely mounted and perfectly positioned, run the first checks on the lock (opening/closing) in mechanical mode to make sure there is no frictioning on the levers (bars/switchlocks) or on the key when turning.*
These problems could impair correct electronic operation of the lock and cause permanent malfunction. Mottura Serrature di Sicurezza S.p.A. declines all liability if this procedure is not performed and, in such case, all warranties on the product will lapse.

If a mains powered connection is provided, it is advisable to use grommet 99144 (not included) between fixed upright and leaf, attaching it as shown in the detail (Fig. 3RH) and instructions attached to the grommet pack.

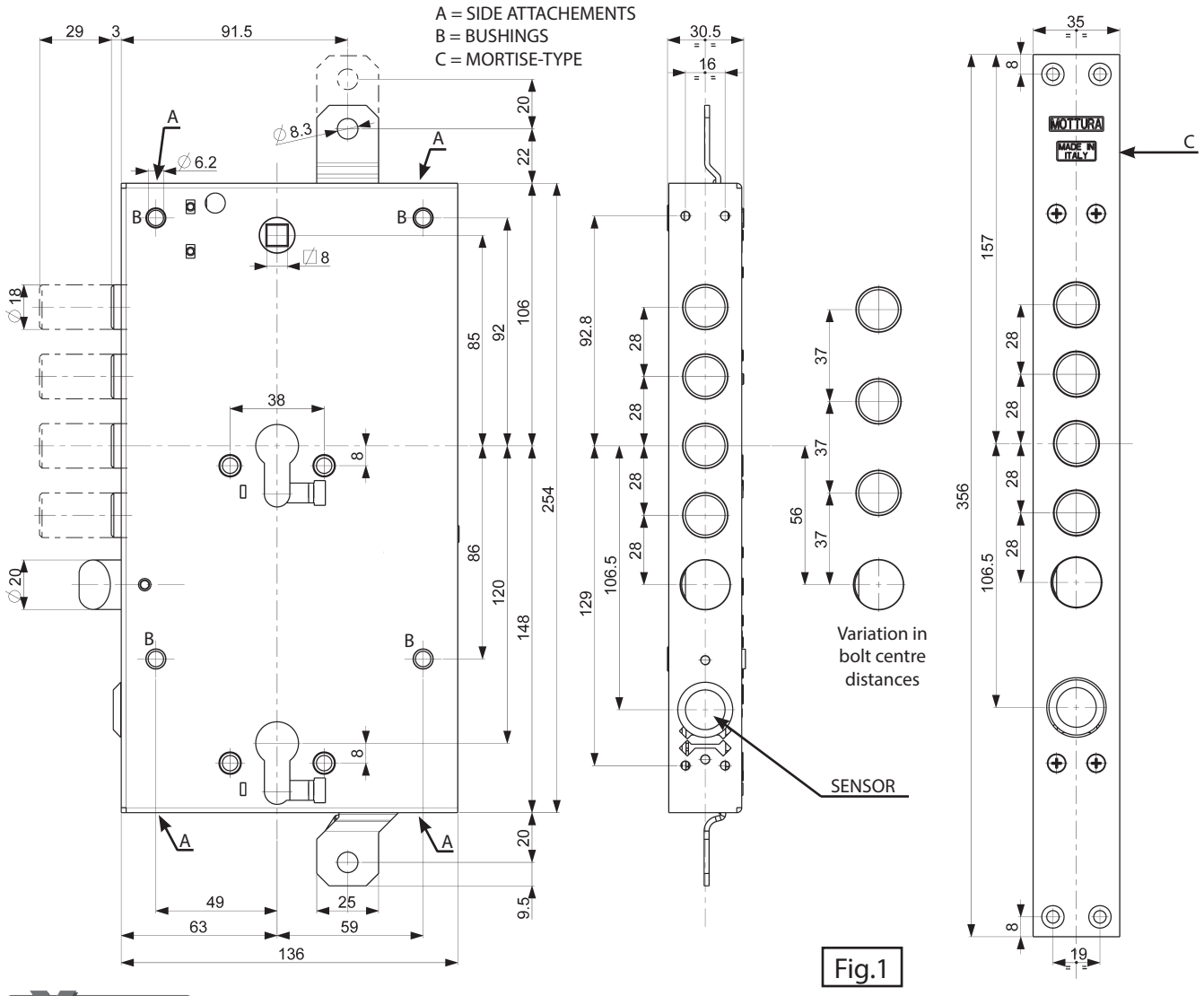

Fig.1

A = SIDE ATTACHEMENTS
B = BUSHINGS
C = MORTISE-TYPE

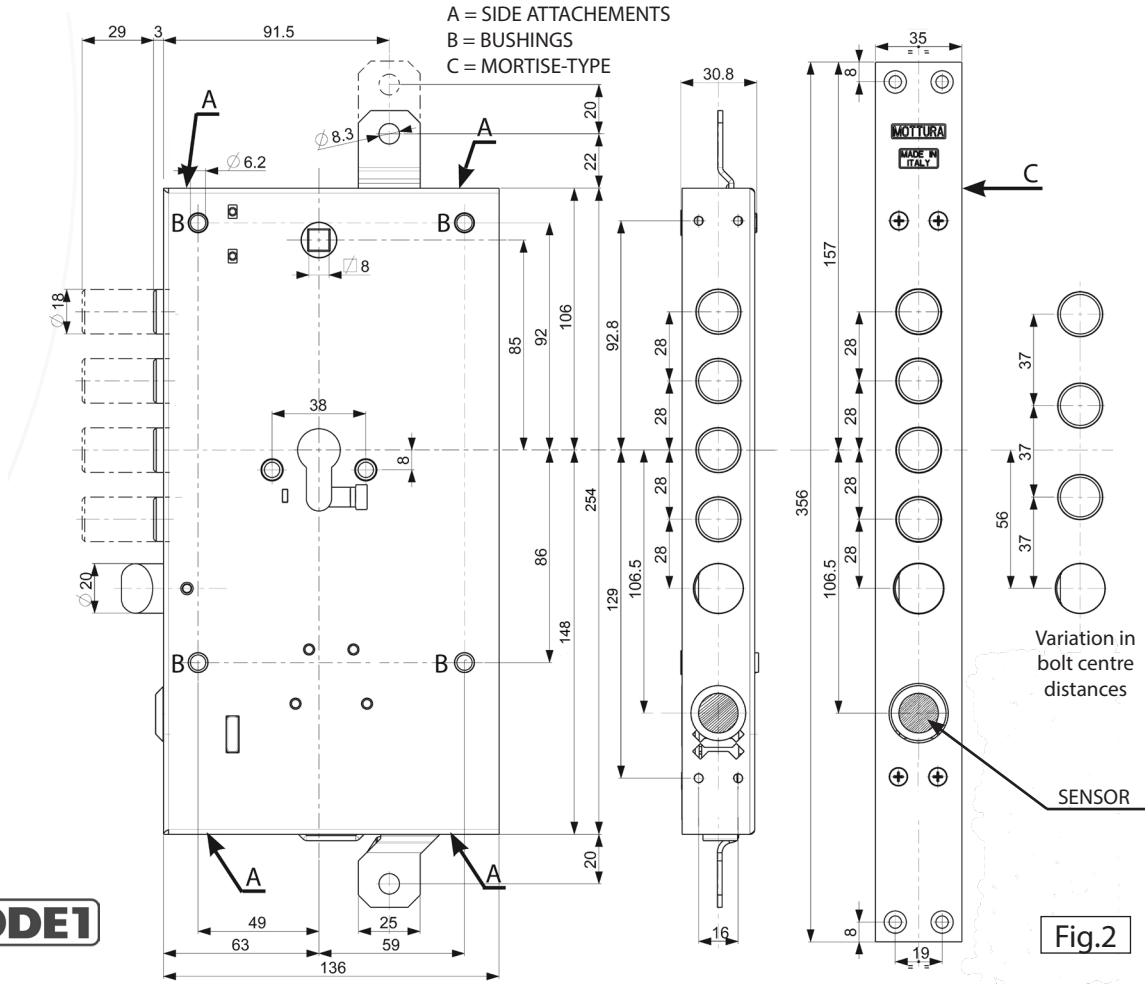

MXMODE1

Fig.2

2.1 - DRILLING DIAGRAM (CHANGEABLE POSITIONS) AND DIMENSIONS

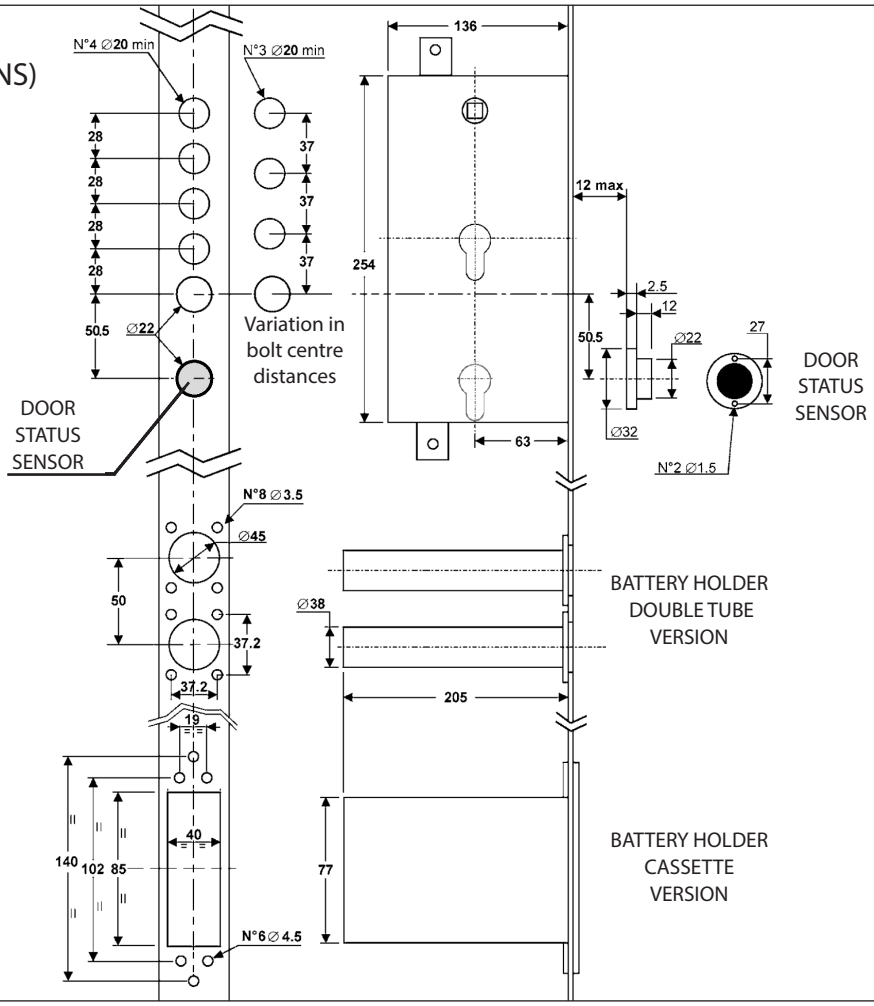

Fig.3

2.2 - CYLINDER FIXING

For proper functioning of the lock, we recommend installation of a MOTTURA CHAMPIONS® double or half Europrofile cylinder (according to application) (DO NOT use cylinders with knobs).

For better protection of the cylinder from the outer side of the door, we recommend the use of MOTTURA DEFENDER® systems. For these articles (not included in the pack), please see MOTTURA catalogs. Alternatively use European cylinder with the dimension shown in the diagram.

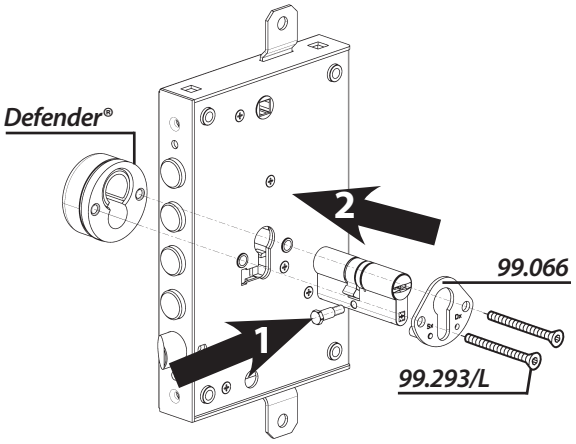

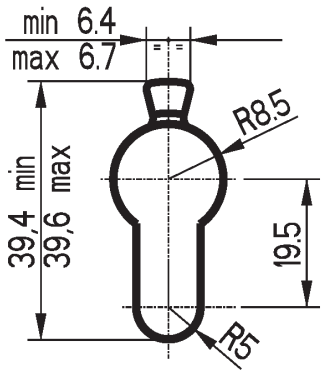

2.3 – XMODE1 QUICK RELEASE VERSION (CODE XTH...)

The lock bolts in the quick-release version are unlocked using the handle. To correctly install such locks, fasten a blocking plate on the outside face of the lock centring it over the appropriate notch and securing it with the supplied M4 screw.

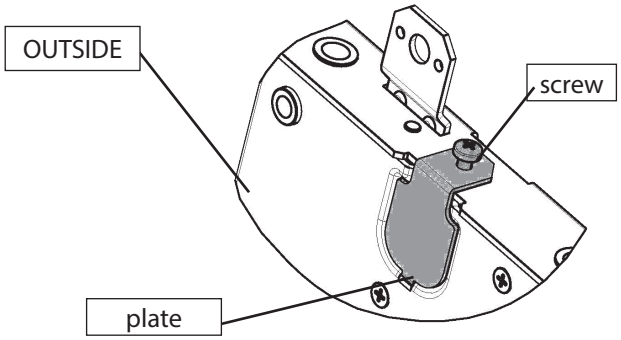

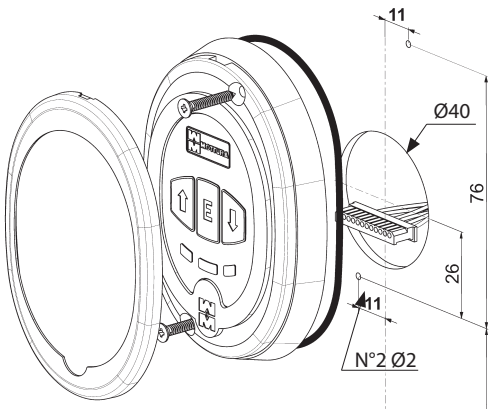

KEYBOARD VERSION (ART. 99.685)

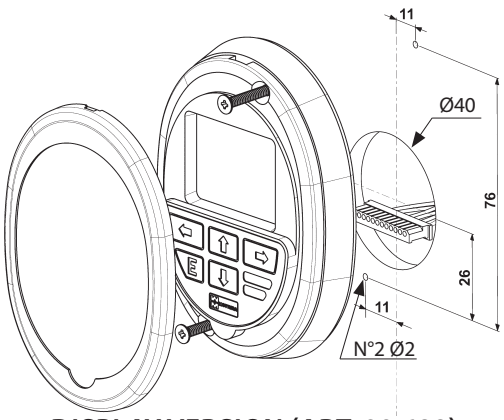

DISPLAY VERSION (ART. 99.688)

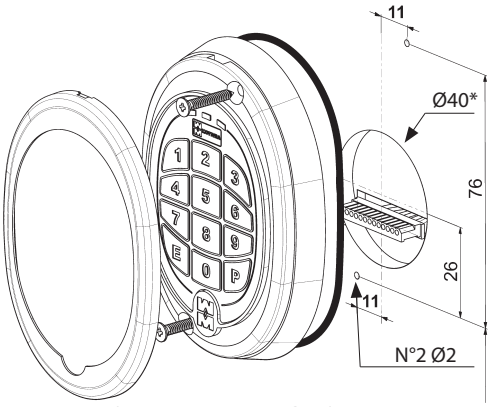

KEYBOARD + TRANSPONDER VERSION (ART. 99.686)

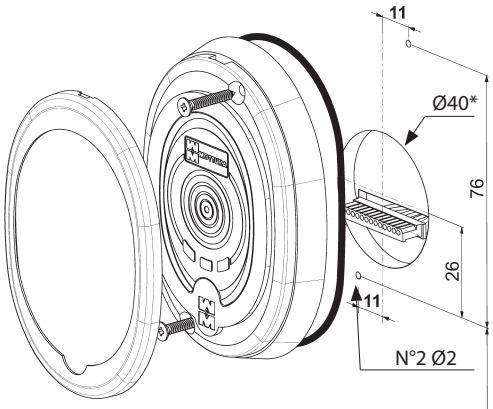

TRANSPONDER VERSION (ART. 99.687)

** 40 mm diameter hole to be drilled only on the external panel. Cut a 36x20 mm opening on the plate if the external panel has thickness less than/equal to 6 mm; otherwise, cut a 32x8 mm slot.*

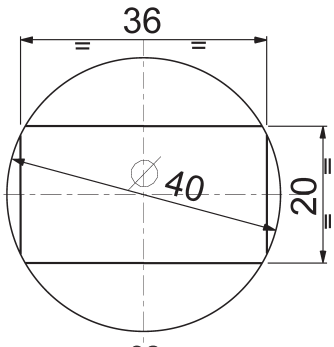

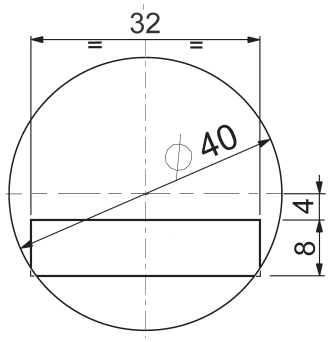

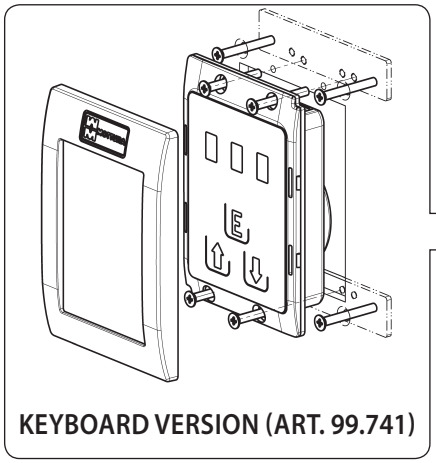

KEYBOARD VERSION (ART. 99.741)

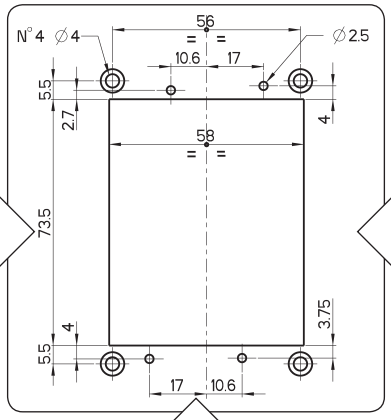

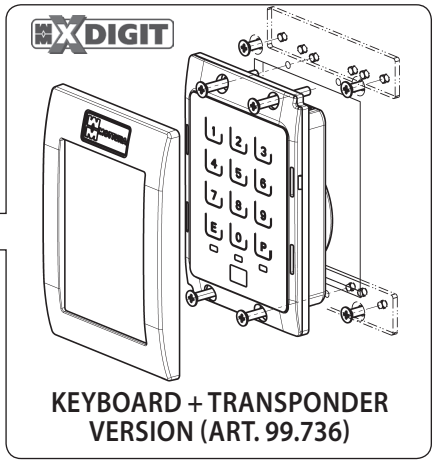

KEYBOARD + TRANSPONDER VERSION (ART. 99.736)

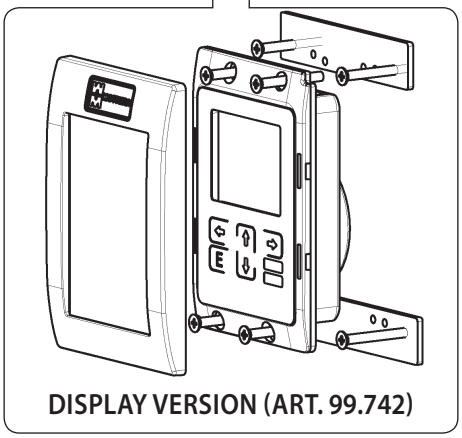

DISPLAY VERSION (ART. 99.742)

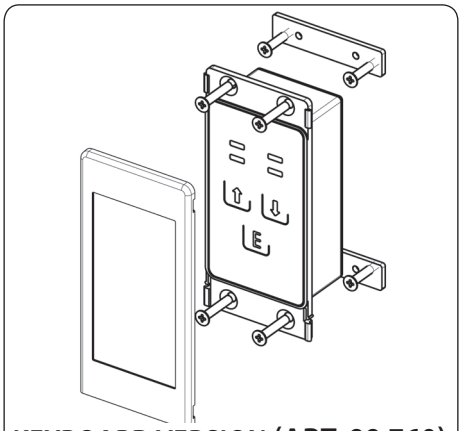

KEYBOARD VERSION (ART. 99.760)

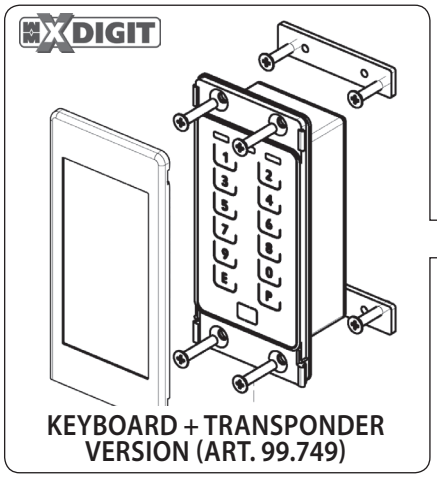

KEYBOARD + TRANSPONDER VERSION (ART. 99.749)

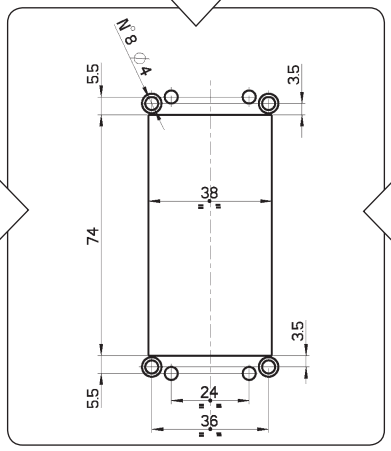

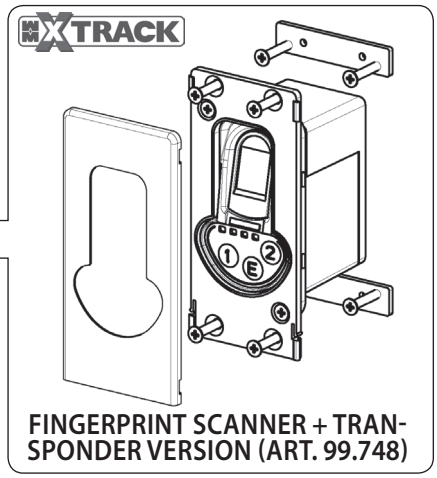

FINGERPRINT SCANNER + TRANSPONDER VERSION (ART. 99.748)

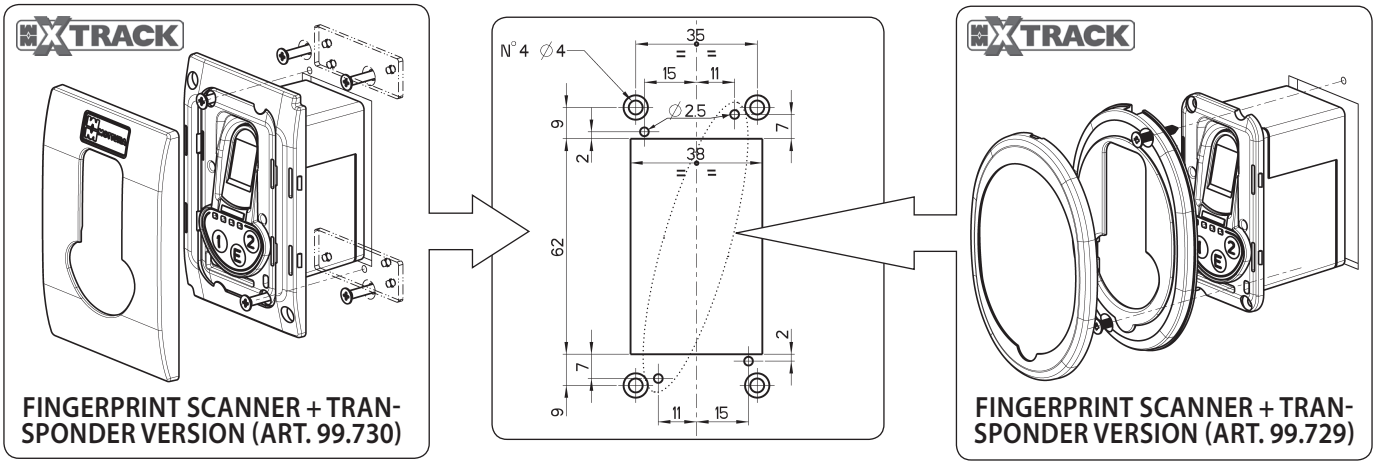

FINGERPRINT SCANNER + TRANSPONDER VERSION (ART. 99.730)

FINGERPRINT SCANNER + TRANSPONDER VERSION (ART. 99.729)

3.2 - TYPES OF ESCUTCHEONS

The escutcheon is designed for installation on the door panel in a position near the two other user work zones (handle and cylinder escutcheon). During installation, follow the drilling diagrams shown in the respective chapters and make sure the connection cable is 1,000 mm long. For installations other than as indicated, check that the cable length allows for such installation without disturbing movement of the bars or limiter; otherwise, contact your authorised dealer. When fixing is complete, insert the metallic escutcheon cover, which is available in different finishes. Some escutcheons require an IP54 protection rating.

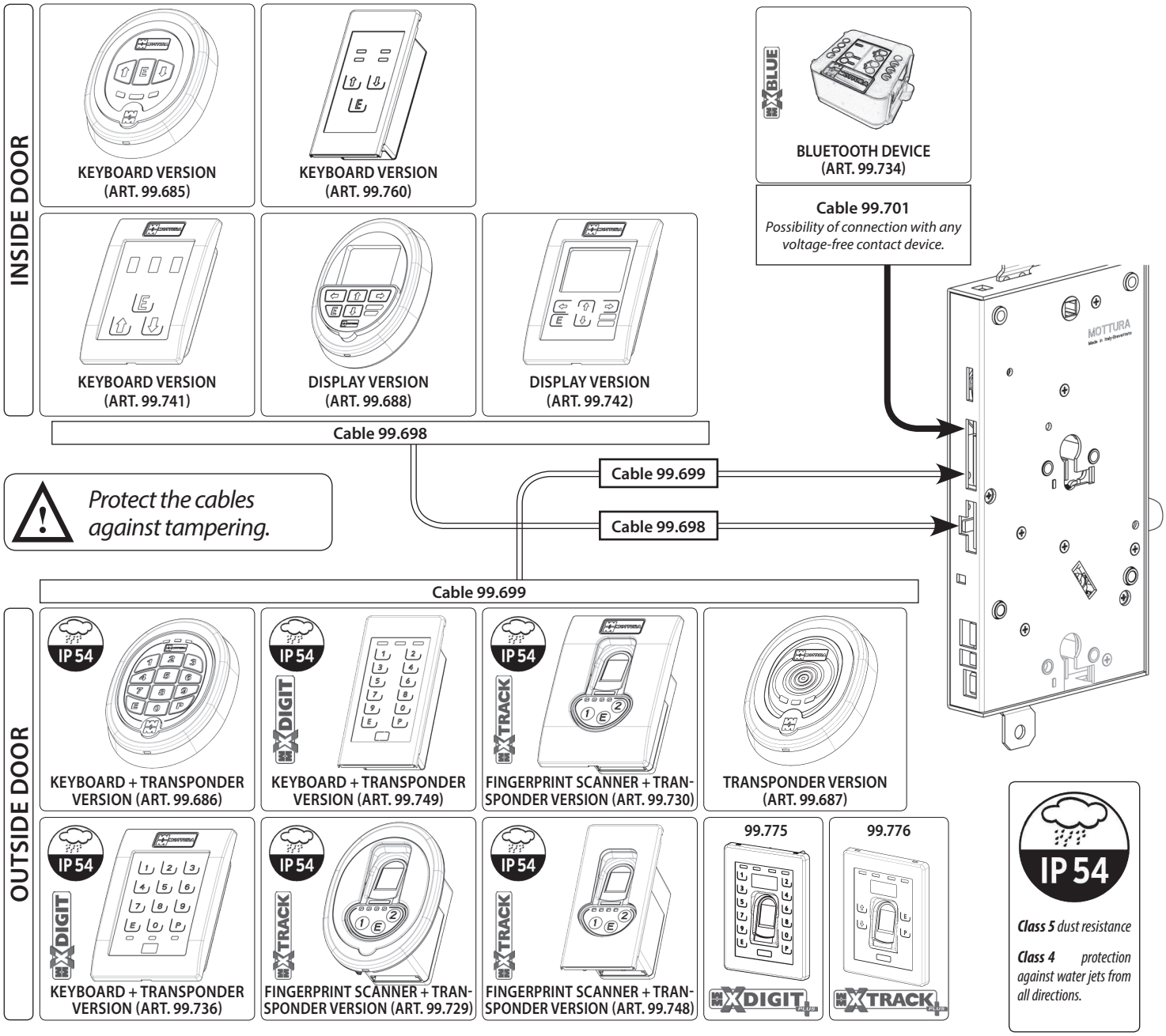

4 - CONNECTING REMOTE CONTROL DEVICES

4.1 - EXTERNAL PERIPHERAL VOLTAGE-FREE CONTACT

You can operate the lock with a "Normally Open" button or with a device fit with a "Normally Open" voltage-free contact (not supplied) to be connected to the lock by means of cable 99.701 (not supplied). Closing this contact for an interval from 0.5 to 2.0 seconds is equivalent to using button "E" on the internal escutcheon.
If the remote opening button/device is located more than 4 meters away from the lock, install a relay (not supplied) between the door and the device, with the coil connected to the remote control and the "Common" and "Normally Open" contacts of the relay connected to the lock with cable 99.701. The cable has to run through a grommet (Art. 99.144 – available on request).
Connect cable 99.701 as shown on the following diagrams.

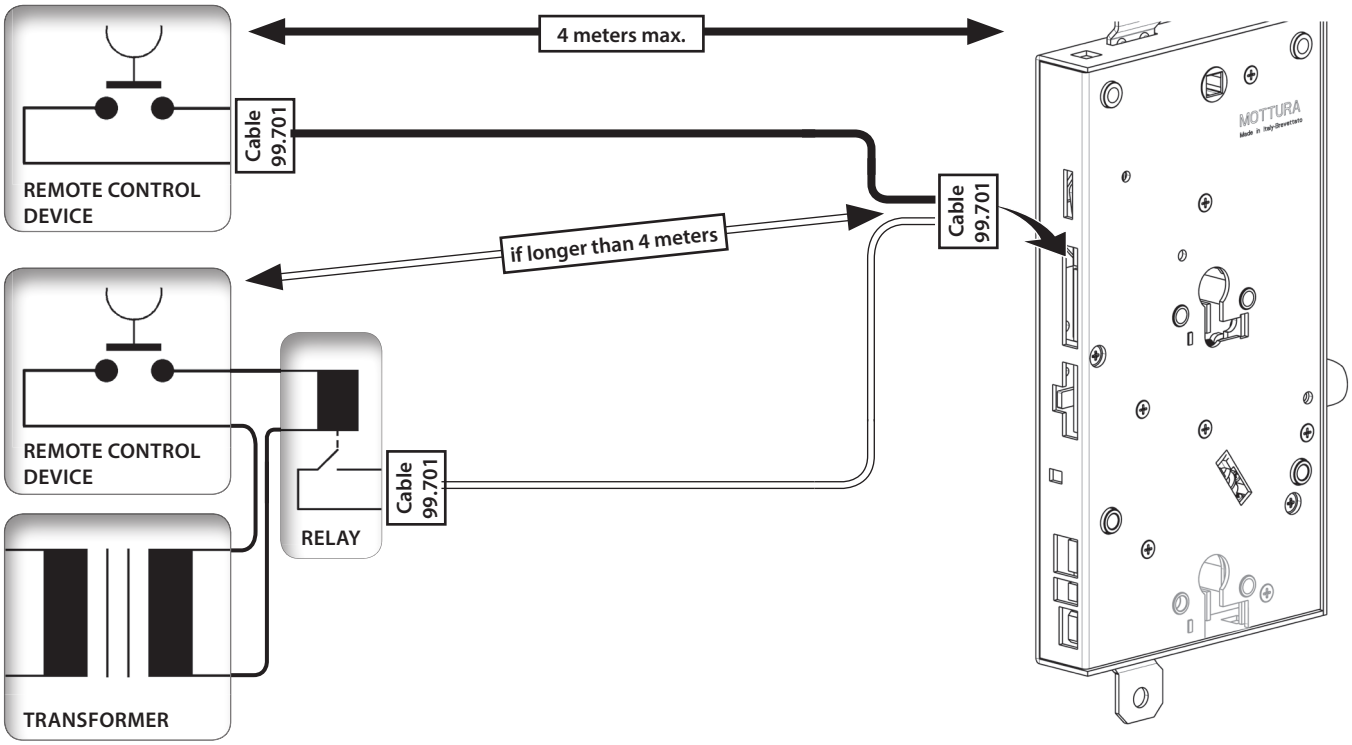

4.2 - EXTERNAL PERIPHERAL MOTTURA REMOTE CONTROL (99.684)

You can remotely operate and control the lock with the "REMOTE CONTROL" device (code 99.684 – available on request), to be connected to the lock by means of cable 99.702 (not supplied). Thanks to this device (which transmits an encrypted signal to the lock), any attempt to short-circuit the connection cable will have no effect.
The cable has to run through a grommet (Art. 99.144 – available on request) and is connected to the lock with the 6-pin connector. See the installation manual supplied with the remote control for information on its connection and use.

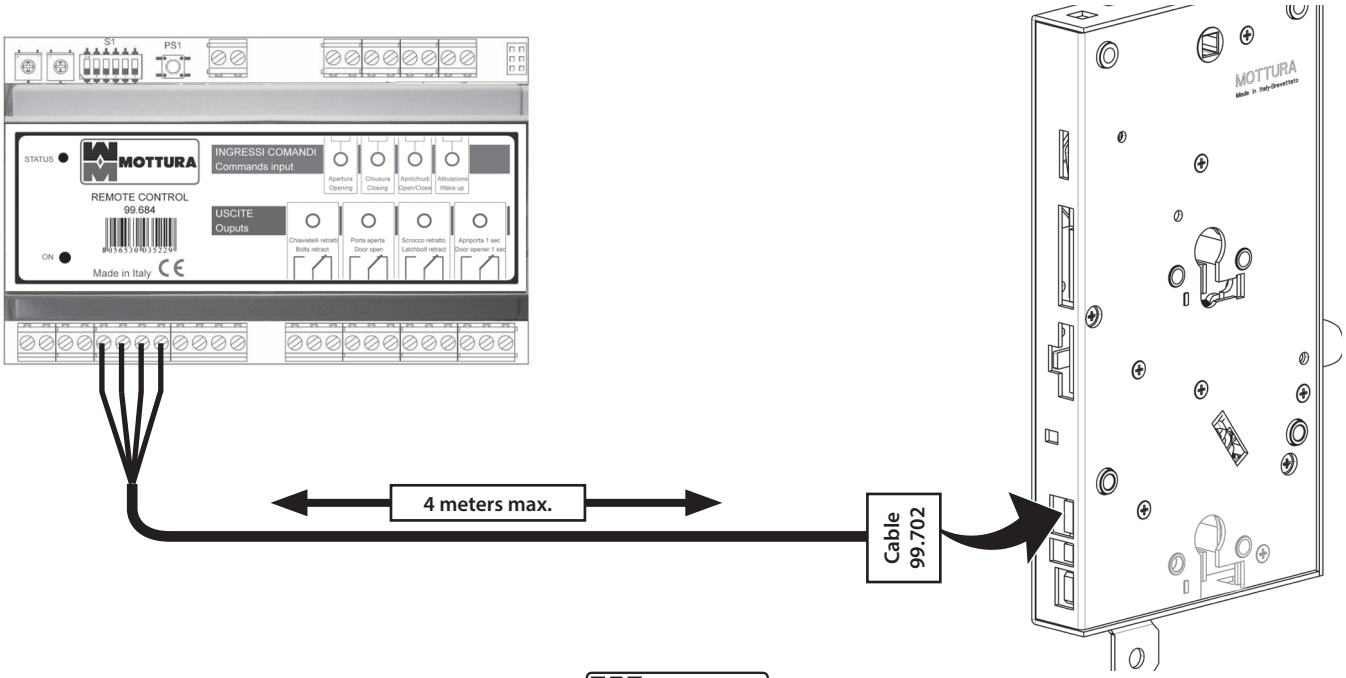

5 - CONNECTING THE POWER SUPPLY

The X-MODE and X-MODE1 locks offer a number of options based on the type of power supply and electronic board chosen for the system.
POWER SUPPLY SYSTEM (with dedicated optional accessories):
- Non-rechargeable alkaline batteries
- Network
- Non-rechargeable alkaline batteries + network
- Rechargeable batteries + network

Before switching on the power supply and/or inserting the batteries into their compartment, complete all connections and make sure they comply with the wiring diagrams.
The network adapter (Art. 99.683) must be placed as close as possible to the door: It is always better to keep the 230 VAC main power supply cables longer and the lock 12 VDC power supply cables shorter, in order to minimise voltage drop along the cable.
In case you must use longer lock power supply cables, never exceed 15 meters with a section of at least 1.5 mm2 (AWG15).
The following table lists the possible power supply combinations, specifies the wiring diagram to be followed for each, and provides the codes for the used cables and components.

XMODE M2.0 WIRINGS

	POWER SUPPLY	ALKALINE BATTERIES	MAINS	ALKALINE BATTERIES + MAINS	RECHARGEABLE BATTERIES + MAINS
WIRING	*BATTERY PACK*	*Fig. A*		*Fig. C*	*Fig. D*
	MAINS		*Fig. B*	*Fig. C*	*Fig. D*
	BATTERY CHARGER				*Fig. D*
COMPONENT	*BATTERY CHARGER*				*Fig. D*
	AC/DC ADAPTER		*Fig. B*	*Fig. C*	*Fig. D*

NOTE : ***If you use the battery charger (art. 99 711), please note that the cables have been designed to be mounted inside the door. Refer to the installation instructions provided with the article.***

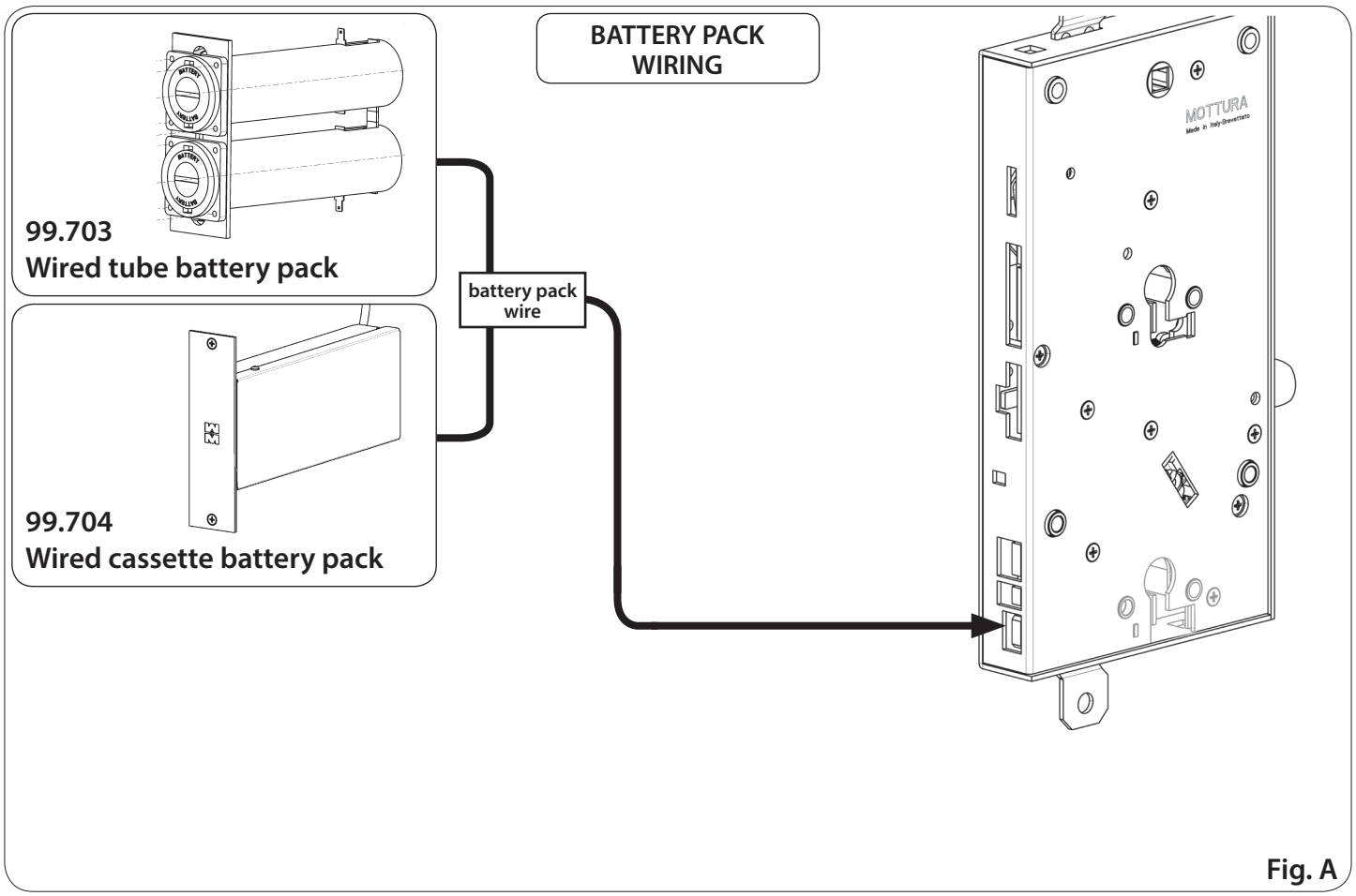
BATTERY PACK
WIRING
99.703
Wired tube battery pack
99.704
Wired cassette battery pack
battery pack
wire
MOTTURA

Fig. A

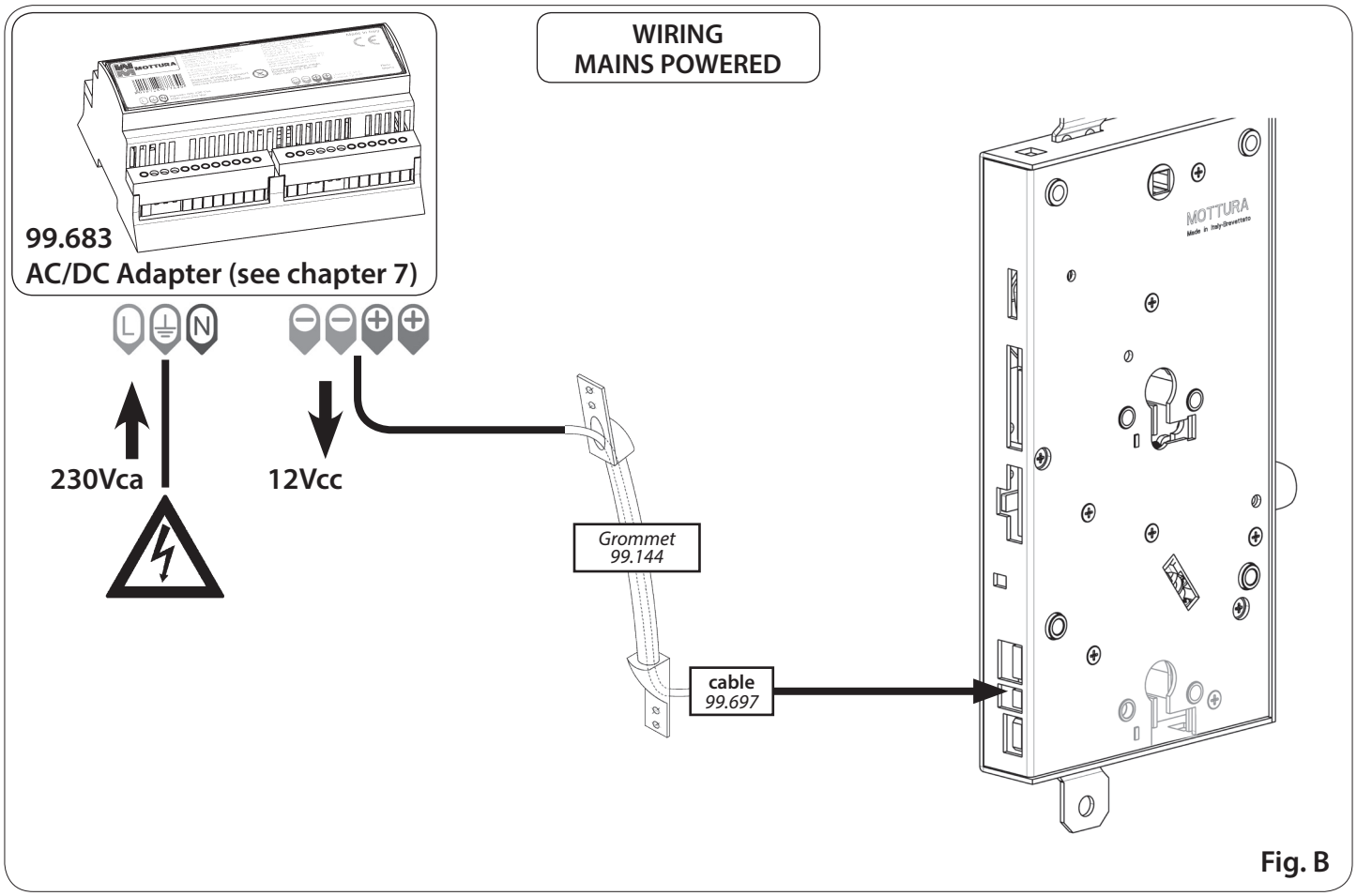
WIRING
MAINS POWERED
99.683
AC/DC Adapter (see chapter 7)
L
N
230Vca
12Vcc
Grommet
99.144
cable
99.697
MOTTURA

Fig. B

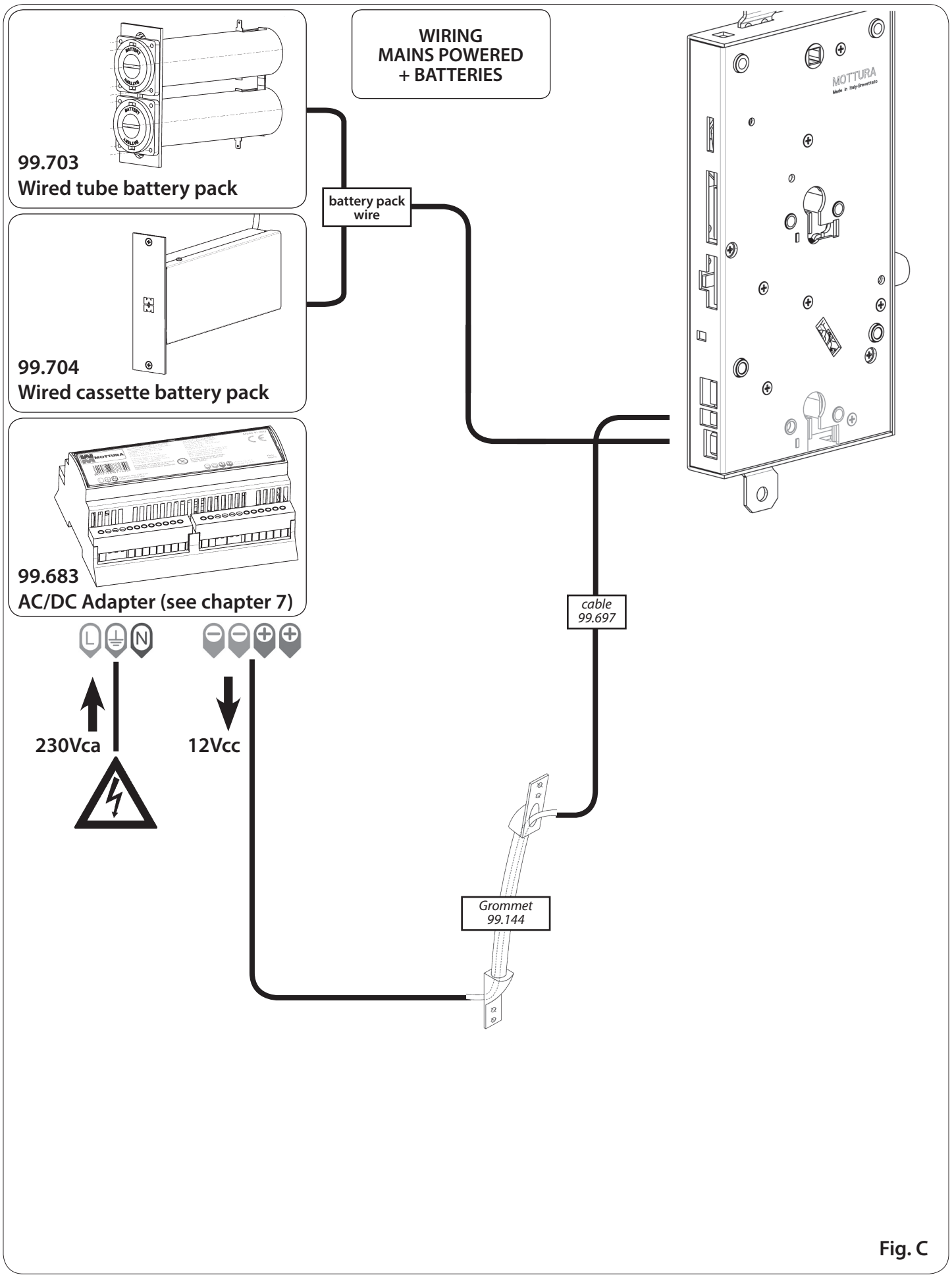
WIRING
MAINS POWERED
+ BATTERIES
99.703
Wired tube battery pack
battery pack wire
99.704
Wired cassette battery pack
99.683
AC/DC Adapter (see chapter 7)
cable 99.697
L
N
230Vca
12Vcc
Grommet 99.144
MOTTURA

Fig. C

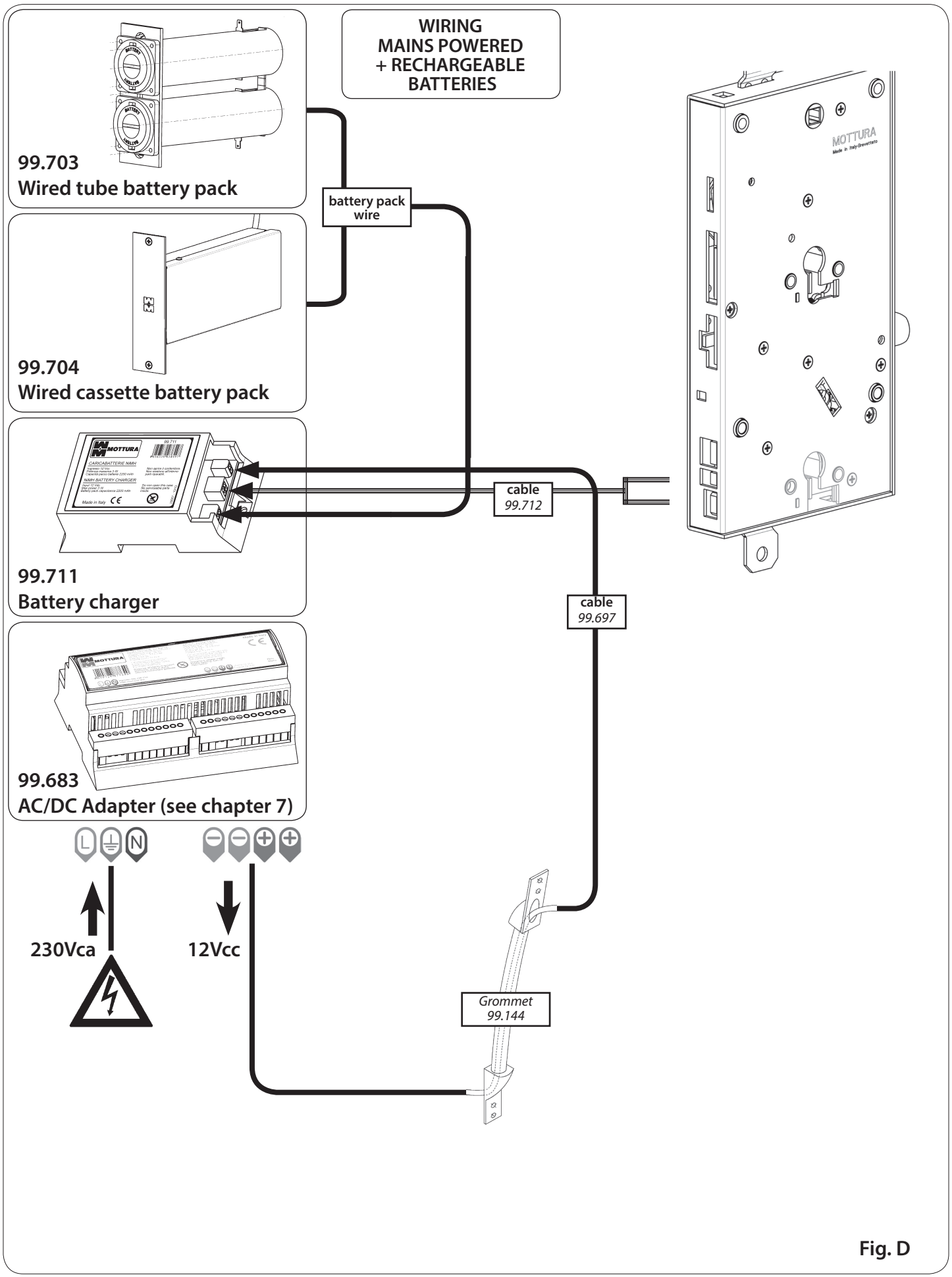
WIRING
MAINS POWERED
+ RECHARGEABLE
BATTERIES
99.703
Wired tube battery pack
battery pack wire
99.704
Wired cassette battery pack
99.711
Battery charger
cable
99.712
cable
99.697
99.683
AC/DC Adapter (see chapter 7)
L
N
230Vca
12Vcc
Grommet
99.144
MOTTURA

Fig. D

6 - ELECTRICAL WIRING

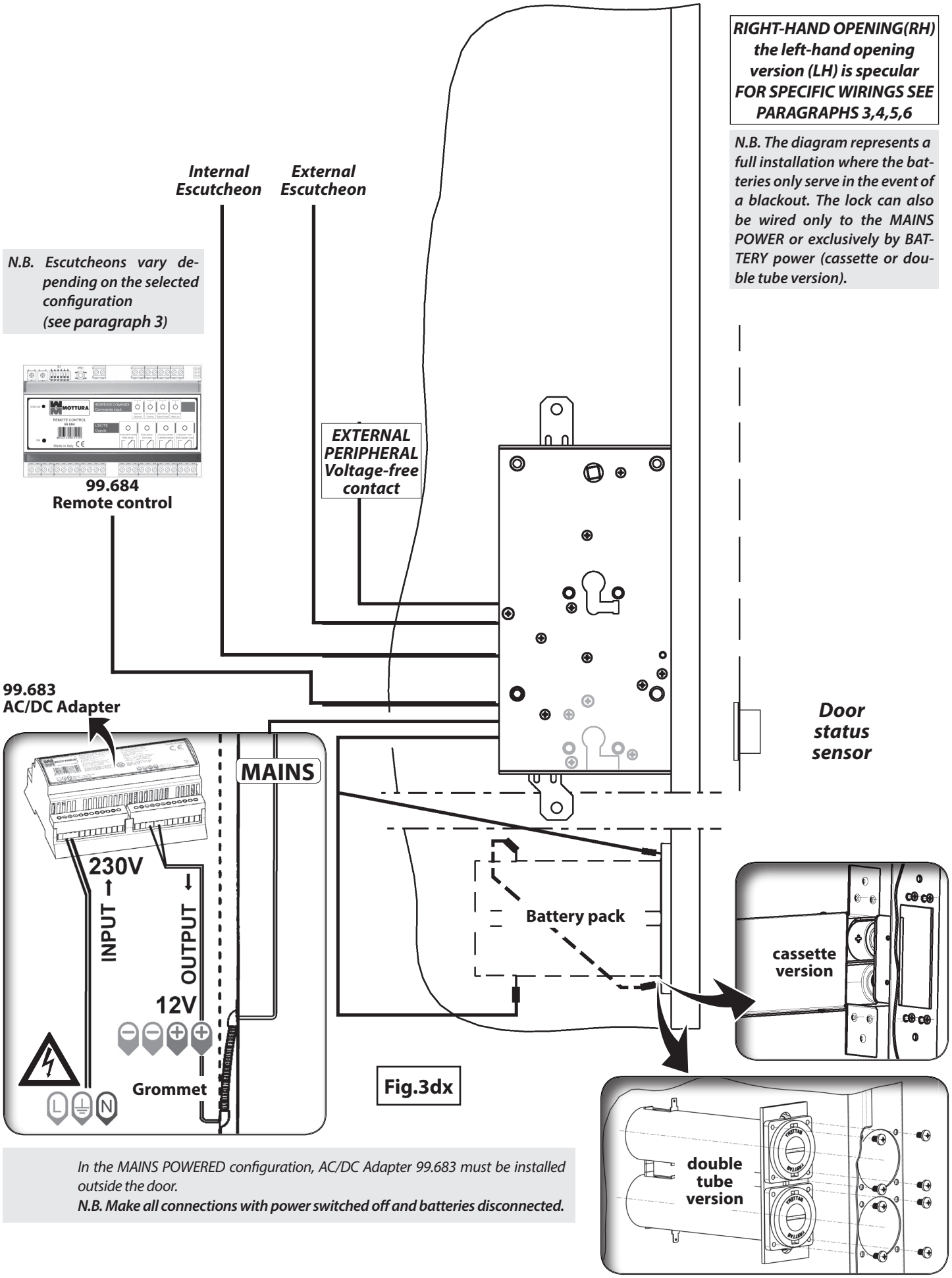

In the MAINS POWERED configuration, AC/DC Adapter 99.683 must be installed outside the door.

N.B. Make all connections with power switched off and batteries disconnected.

7 - AC/DC ADAPTER CONNECTION (99.683)

7.1 - MECHANICAL FIXING

The AC/DC adapter transforms the 230VAC 50/60Hz home power supply into a 12 VDC isolated non-stabilized supply to power the lock.
It can be fixed to the wall: the 2 slots on the bottom of the box allow it to be hooked to screws fixed to the wall (follow the drilling instructions on the bottom). As an alternative, the box can be hooked to a DIN guide (EN 60715) (not supplied) and snapped into place (black hook facing downward). To release it, pull the black hook downward with a flat-blade screwdriver.

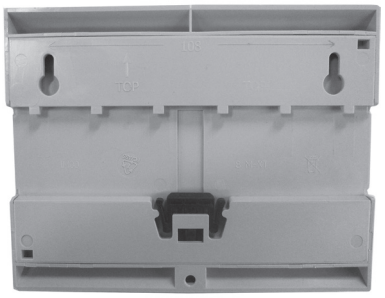

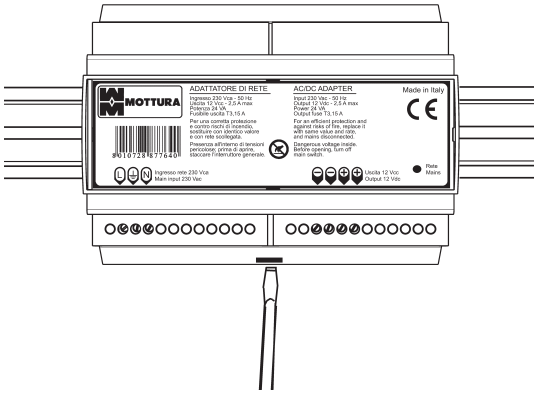

7.2 - ELECTRICAL CONNECTION

All connections must be made by trained technical personnel in conformity to electrical safety standards and according to rules of Good Practice.

INPUT: Connect the 230VAC 50/60Hz home power supply to input terminals L and N, inserting a cut-out and two-way switch up-line. Connect the ground of the power supply to the input terminal with the ground symbol.
OUTPUT: Connect the lock power supply cable (code 99.697) to the 12 VDC output terminals, taking care to respect polarity (red to positive (+), black to negative (-)) to prevent permanent damage to the system.
Double output terminals are provided ONLY to power any other Mottura devices. Using these terminals for any other purpose may permanently damage the system.

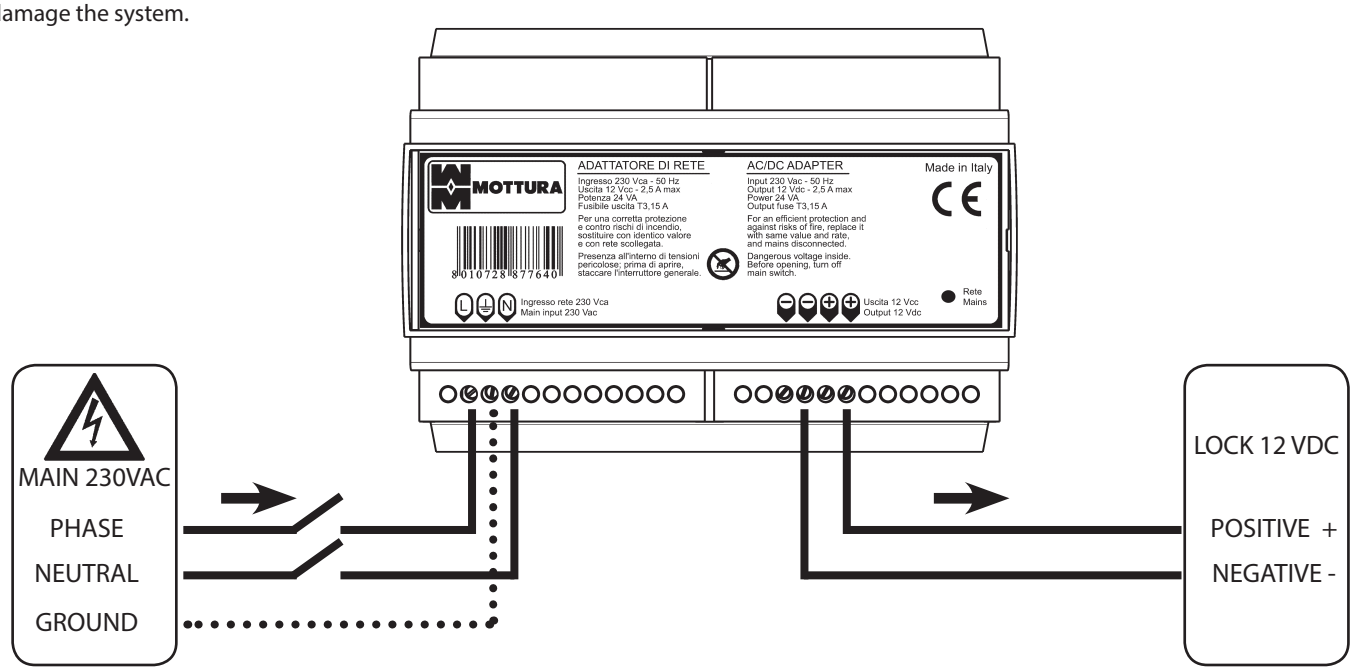

REPLACING THE OUTPUT FUSE: The transformer is protected in output by a fuse. An integral fuse is indicated by the "MAINS/RETE" LED on the front panel; if the LED is off with power switched on, the fuse is blown.

Before replacing the fuse, switch off the 230 VAC mains power supply and take all possible precautions to avoid electrical shock.

Remove the terminal cover from the 12 VDC OUTPUT side by inserting a small flat-blade screwdriver a few millimeters into the center housing on the cover, then gently tilt it from the other side of the box until the fastening tab is released. Remove the screwdriver and gently slide off the terminal cover with your hands.
Remove the plastic cover of the fuse holder, remove and replace the fuse with one with the same rating (see technical data, paragraph 7.3).
Reposition the terminal cover before switching voltage back on.

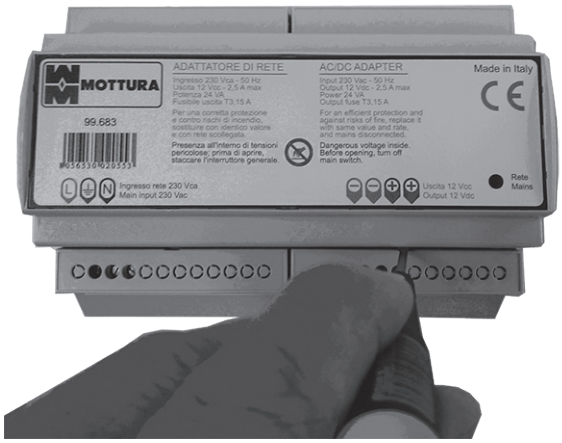

7.3 - TECHNICAL DATA

INPUT POWER SUPPLY	VOLTAGE / FREQUENCY	230 VAC / 50-60Hz
	MAX. CURRENT DRAW	< 0,105 A
	MAX. POWER	24 VA
	PROTECTION RATING	IP10 (with terminal covers on)
	WORK TEMPERATURE	Min -10 °C ÷ Max.+40 °C
	ENCAPSULATED TRANSFORMER PROTECTION	T 0.125 A
MECHANICAL	WEIGHT	0.7 Kg
	DIMENSIONS	142 x 110 x 62 mm
	MATERIAL	Blend PC/ABS self-extinguishing UL94-V0
OUTPUT	VOLTAGE	12 VDC non-stabilized
	IMPULSE ABSORPTION (5 sec. max)	2 A
	FUSE	DELAYED ACTION T 3.15 A (5 x 20) mm
TERMINAL BOARD	RATED SECTION OF CABLES	0.5mm^2 (AWG20) to 2 mm^2 (AWG12)

Pursuant to article 26 of Italian Legislative Decree no. 49 of 14 March 2014 "Implementation of EU Directive 2012/19 concerning waste electrical and electronic equipment (WEEE)" and article 9 of Italian Legislative Decree no. 188 of 20 November 2008 "Implementation of EC Directive 2006/66 on batteries and accumulators and waste batteries and accumulators" adequate waste sorting for subsequent sending of disposed equipment to recycling, treatment and environmentally compatible disposal contributes to avoiding possible negative effects on the environment and human health and promotes reuse and/or recycling of the materials composing the equipment. Unlawful disposal of the product by the user may result in the application of penalties pursuant to current laws and regulations on the matter. We remind that batteries and power adapters, if present, must be removed before the device is disposed. Batteries and adapters must be collected and separately disposed.